Unizik Journal of Technology, Production and Mechanical Systems (UJTPMS)

journal homepage: https://journals.unizik.edu.ng/index.php/ujtpms/about
PRINT ISSN: 1115-7143 || ONLINE ISSN: 1115-7453

Design of an induced roller magnetic separator for mineral value addition

Oladunni Oyelola Alabi [1*], Adegbola David Adeniran[2], Oluwaseun Samuel Dipo-Ogunleye[2]
Ojotu Ijiwo Joseph[3], Babatunde Kazeem Adeoye[4]

[1]Department of Material and Metallurgical Engineering, Federal University of Technology Akure, Ondo State, Nigeria,704, Akure, Ondo State,340252, NIGERIA
[2]Department of Mechanical Engineering, Elizade University Ilara-Mokin, Ondo State, Nigeria,002, Adeojo Avenue Ilara-Mokin, Ondo State, 340112, NIGERIA
[3]Department of Automotive Engineering, Elizade University Ilara-Mokin, Ondo State, Nigeria,002, Adeojo Avenue Ilara-Mokin, Ondo State, 340112, NIGERIA
[4]Department of Chemical Engineering, Federal University of Technology Akure, Ondo State, Nigeria,704, Akure, Ondo State, 340252, NIGERIA

ARTICLE INFO

Article history:
Received Feb. 28, 2025
Revised March 15, 2025
Accepted March 15, 2025

Available online March 27, 2025

Keywords:
Magnetic, Roller, Minerals, Separation Techniques, Economic Impact

ABSTRACT

Material separation is critical in value addition process especially in mining and other related industry. There are several methods employed in separating material into different classes. Magnetic separator as a separation technique/method leverages the magnetic properties of materials and is employed in various industries, including mineral processing industries, recycling, and resource recovery. Researchers and Engineers have conducted numerous studies to comprehend how different types of paramagnetic minerals behave when separated using various separator technologies. However, despite these efforts, these separators have not been widely adopted for processing different paramagnetic minerals because most of the existing induced roller magnetic separator have poor efficiency, cost-effectiveness and adaptability for different paramagnetic minerals. This paper examines the current state of these separators, providing an overview of their operational mechanisms, practical uses, and theoretical models. It goes further to design an induced roller magnetic separator after considering various factors such as magnetic susceptibility, cost, adaptability and performance efficiency, while observing certain industry specifications. The resulting design will be able produce a magnetic field of about 2.2 Tesla that can be used to separate certain minerals for a reasonable period of time. Further implementation and modification of this design will hope to yield an increase in the extraction and processing of various minerals internally within Nigeria, minimizing dependence on importation of machines, providing jobs and improving the economic status of this country.

1. Introduction

The magnetic characteristics of minerals are used to classify them. Therefore, heavy minerals (HMs) can be separated from the associated gangues/impurity minerals using magnetic separators by exploiting the differences in their magnetic susceptibility in one of the three forms or categories—diamagnetic, paramagnetic, or ferromagnetic minerals. Accordingly, mineral particles that are classified as diamagnetic repel against lower strength of the magnetic field points along the

**Corresponding author: adegbola.adeniran@elizadeuniversity.edu.ng*

magnetic force field lines, while paramagnetic and ferromagnetic mineral particles are attracted towards location with stronger magnetic field strength points along the magnetic force field lines [18].

Whether a material is an induced magnet or a permanent magnet, the magnetic field's strength that the magnet produces is the determining factor. Compared to permanent magnets, induced magnets generate substantially weaker magnetic fields [13]. Even after being taken out of the magnetic field, some of these materials are still magnetic. This indicates that they are now magnetized permanently. These substances are referred to as magnetically hard substances. Alloys with significant concentrations of nickel, iron, and cobalt are examples of materials that are magnetically hard. For as long as they are in the magnetic field, certain materials can only become momentarily magnetized. These materials lose their induced magnetism once they are taken out of the magnetic field. These materials are referred to as magnetically soft. Less iron, nickel, and cobalt make an alloy magnetically soft and produces very weak magnetic fields [13]. A material is said to be diamagnetic if it is not attracted to either pole of a magnet or magnetic field. Compared to paramagnetic and ferromagnetic materials, diamagnetic materials—such as carbon, copper, water, and plastic—are even less strongly repelled by a magnet.

Particulates may be utilized as raw materials in some industrial operations. Particle systems are very important in the field of mineral processing, which deals nearly solely with particles, from run-of-mines to final separates. A stream of particles with a certain set of characteristics is the input stream that mineral processing processes aim to separate into product streams, each of which has a unique set of specified characteristics. Among the main methods for separating minerals from low-grade ore to high-grade separation are gravity separation, froth flotation, and magnetic separation; these methods have established principles [2].

Firstly, two components—a solution or a dry granular mixture—can be separated using the industrial process of gravity separation. The primary force of separation in all gravitational techniques is gravity. Therefore, when the components of the mixture have distinct specific gravities (SG), it is sufficiently feasible to separate them using gravity. In order to reject gangue minerals with low SG, gravity separation techniques—which are thought to be the oldest and most prevalent (pre)separation process steps—are often used on the majority of heavy mineral (HM) sand deposits. However, upon separation by gravity, these HMs near densities frequently present significant difficulties [12]; [8]; [21]; [5]. Secondly, froth flotation is a technique used to extract minerals from gangue by exploiting differences in their hydrophobicity. Wetting agents and surfactants are utilized to increase the hydrophobicity differences between precious minerals and waste gangue. However, with further refining, the flotation technique is used to separate a wide range of sulfides, carbonates, and oxides. Coal and phosphates are also upgraded (purified) via the flotation technique.

Magnetic separation is the process of separating mixture components by using a magnet to attract magnetic substances and separate non-magnetic from magnetic substances. A small number of minerals that are paramagnetic and ferromagnetic—that is, contain iron, nickel, and cobalt—benefit from this approach. Most metals, including gold, silver, and aluminum, are diamagnetic. Magnetic separation techniques are used in many industries, such as mineral beneficiation, food, plastic, textile, and ceramic. Factories have been under a lot of pressure to survive since the implementation of stricter global environmental protection policies; hence, processing plants and scientific researchers have become interested in dry permanently induced magnetic separators as an energy-saving and environmentally friendly separation technology. Unlike other separators, the induced roller magnetic separators are highly efficient in separating paramagnetic minerals thus contribute to its high demand and value addition to mineral processing industries in Nigeria.

The general public is intended to gain insight from this study. The objective of this effort is to design a permanent roller magnetic separator for engineering and industrial applications that will separate magnetic minerals from non-magnetic materials.

2. Materials and Methods

2.1 Design Considerations

The following factors were put into consideration in order to design an efficient and functional induced Magnetic Separator:

a. Minimal noise design: To ensure a quieter operation environment
b. Ease of assembly and maintenance at optimum cost: Introducing simple components for fast, affordable repairs and replacement cost.
c. Magnetic properties of material: To optimize the strength of the magnetic field for an effective separation
d. Ergonomically ease of operation: Considering an average human height to minimize strain to users
e. Portability

2.2 Material Selection

The magnetic, mechanical properties and cost were taken into consideration when designing the permanently induced magnetic separator. For instance, the choice of the roller material was based on high magnetic permeability and ability to resist demagnetization. Table 1-7 represent the various parameters constituting the design of a permanent roller magnetic separator

Table 1: Conveyor Belt Details for the Induced Roller Magnetic Separator

Parameter	Unit	Value
The belt's length	mm	3700
The Belt's thickness (A_4)	mm	0.5
Belt Width	mm	300
Service Factor		1.25

Table 2: Hopper Details for the Induced Roller Magnetic Separator

Parameter	Unit	Value
The volume of the Hopper	mm^3	1060622.070
Surface Area of Hopper	mm^2	823143.566
Height of the Hopper	mm	525.829

Table 3: Roller Details for the Induced Roller Magnetic Separator

Parameter	Unit	Value
Diameter (A_2)	mm	100
Length (Magnetic B_4 and Non-Magnetic A_{15}	mm	350
Magnetic Disc Thickness	mm	5
Steel Disc Thickness	mm	2.5
Roller Shaft Diameter	mm	20
Roller Shaft Length	mm	50

Table 4: Conveyor Frame Details (ISO 657-1 50 x 5, hot rolled steel equal angle)

Parameter	Unit	Value
Separator Length	mm	1860
Separator Width	mm	400
Separator Height	mm	1075
Separator Frame Height	mm	800
Separator Collector Height	mm	275

Table 5: Belt Drive Details (Synchronous type) for the Induced Roller Magnetic Separator

Parameter	Unit	Value
Diameter of the Driver Pulley	mm	111.8
Diameter of the Driven Pulley	mm	225
The width of the belt	mm	5
Belt Length	mm	600
Centre Distance	mm	126.5

Table 6: Material Retrieval Details (5mm thick) for the Induced Roller Magnetic Separator

Parameter	Unit	Value
Container Width	mm	280
Container Length	mm	280
Container Height	mm	200

Table 7: Electric Motor Details for the Induced Roller Magnetic Separator

Parameter	Unit	Value
Wattage	W	2.5

Rated Horsepower	Hp	0.5
Service factor	-	1.3
Design Horsepower	Hp	0.65
Voltage	V	220
Speed	Rpm	1430

2.3 Analysis of Component Part of the Induced Magnetic Separator

The machine's components, including the hopper, belt drives, machine frame and electrical unit were designed using equations (1) to (15)

a. Hopper: The volume of the feed hopper according to Adetunji and Quadri [1] is determined thus:

$$V_{frustrum} = \frac{l_b w_b h_b - l_s w_s h_s}{3} \quad (1)$$

b. Pulley: A study by Orhan and Gülsoy [15] investigated the efficiency of using different magnetic rolls with corresponding maximum magnetic fields on the surface of 1.05 T, 1.24 T, and 1.27 T and magnet-to-steel disk thickness ratios of 4:1 to separate iron-bearing impurities from feldspar samples of different size fractions. for all the study concluded that, particle sizes, the best separation is not necessarily achieved by the strongest magnetic field. The speed of the machine is determined by the relation.

$$\frac{n_2}{n_1} = \frac{D_1}{D_2} \quad (2)$$

Let n_1 be the speed of the driver pulley, n_2 be the speed of the driven pulley, D_1 be the diameter of the driver pulley, and D_2 be the diameter of the driven pulley.

c. Belt Drive: The belt velocity (V) for a specific driver/magnetic roller is determined by taking into account the belt thickness.

$$V = \frac{\pi(2D)\,N}{60} \quad (3)$$

Thus, the required motor power is given as:

$$P_m = T_e \times V \quad (4)$$

The minimum motor power, P_{min} to run the permanently induced magnetic roller is given as:

$$P_{min} = \frac{P_m}{\eta} \quad (5)$$

Where η is 0.95 accounting for 5% of motor standard energy losses for optimal performance and reduction in energy consumption.

The required magnetic field gradient (i.e. change in magnetic field with distance) is calculated by:

$$F_m = \frac{1}{\mu_0}(\chi_p - \chi_f) m_p B\Delta B \quad (6)$$

where $\mu_0 = 4\pi \times 10^{-7}$H/m, $\chi_p$is the particle's magnetic susceptibility (i.e. ability of material to be magnetized) and χ_f, the fluid's magnetic susceptibility which is 0 for air (dry magnetic separation).

According to Kopp [10], B and BΔB for permanent magnetic rollers are calculated as follows:

$$B = B_0 \exp\left(\frac{-z}{t}\right) \quad (7)$$

$$B\Delta B = \frac{{B_0}^2}{t} exp\left(\frac{-2z}{t}\right) \quad (8)$$

As the driving pulley transfers energy through the electric motor to the drums in order to rotate the conveyor belt, the length and center distance of the belt carrying minerals from the hopper to the magnet or electromagnetic zones were calculated as follows [9]:

$$L_b = 2CD + 1.57(D_2 + D_1) + \frac{(D_2 - D_1)^2}{4CD} \quad (9)$$

Where;

$$CD = \frac{B + \sqrt{B^2 - 32(D_2 - D_1)^2}}{16} \quad (10)$$

d. Belt tension: The belt tensions were computed using the following equation, which models the belt friction according to Yardley and Stale [20], and takes into account the overall resistance, this is the magnetic roller's effective belt tension.

$$\frac{T_1}{T_2} = e^{\mu\theta} \quad (11)$$

Dunlop [3] states that in dry conditions and with bare pulleys, μ = 0.3 for horizontal conveyor belts.

e. Variable frequency drive (VFD) speed control: the synchronous speed which is the constant speed that the VFD will make the electric motor rotate at a particular frequency is:

$$N_s = \frac{120f}{P} \quad (12)$$

Where N_s is the synchronous speed, f is the supply frequency, P is the number of poles in the motor. The VFD specifications are dependent on the rating and parameters of the electric motor [11].

f. Bearing service life/rating: According to Shigley [16], the rating of a bearing is given as

$$L_b = \left[\frac{C}{P_d}\right]^k \times 10^6 \quad (13)$$

Where C represents the dynamic load rating, P_d is the design load. K is 3 for ball bearings, 3.33 for roller bearings.

The critical load a deflected beam can carry is:

$$P_{cr} = \frac{\pi^2 EI}{L_e^2} \quad (14)$$

The maximum allowable load applied is given as

$$P_a = \frac{P_{cr}}{N} \quad (15)$$

Where P_{cr} is the critical load, P_a is the allowable load, N is the factor of safety, E is the Modulus of elasticity, I the Moment of inertia, and L_r is the slenderness ratio,

2.4 Detailed Drawing of the Designed Induced Magnetic Roller Separator

Figures 1,2 and 3 present a detailed drawing of the designed induced magnetic separator.

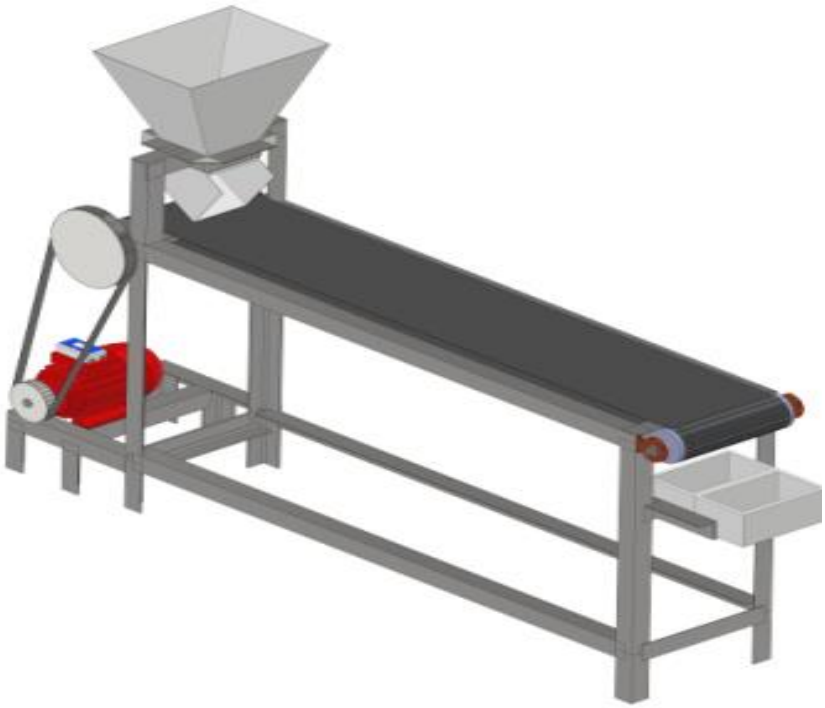

Figure 1: Dry-induced Permanent Roller Magnetic Separator

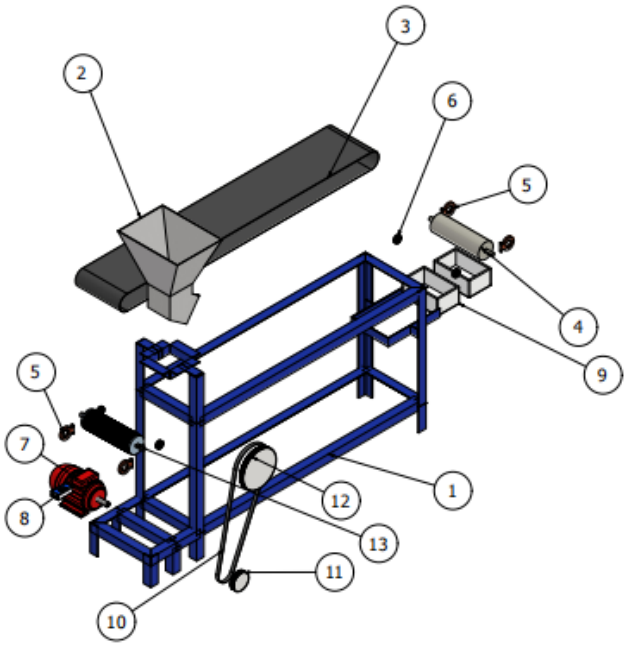

PARTS LIST			
ITEM	PART NUMBER	DESCRIPTION	QTY
1	Steel Frame (ISO 657-1)	Hot-rolled steel sections - Part 1: Equal-leg angles	1
2	Hopper Feeder	Sheet Metal	1
3	Rubber Belt	Elastic material for conveyor mechanism	1
4	Non-Magnetic Roller	Machined Steel	1
5	Bearing Housing	Rotating elements support	4
6	NSK 7004C	High Precision Angular Contact Ball Bearings (Standard Series)	4
7	AC Induction Motor	Electro-Mechanical device	1
8	VFD	Electronic device	1
9	Collecting Box for magnetic and non magnetic material	Plastic	2
10	Synchronous Belt	Rubber	1
11	Synchronous Pulley1	Aluminum	1
12	Synchronous Pulley2	Aluminum	1
13	Assembly of the magnetic Roller	Interleaved arrangement of steel and magnetic discs over a shaft	1

Figure 2: The Exploded View of the Dry-induced Roller Magnetic Separator

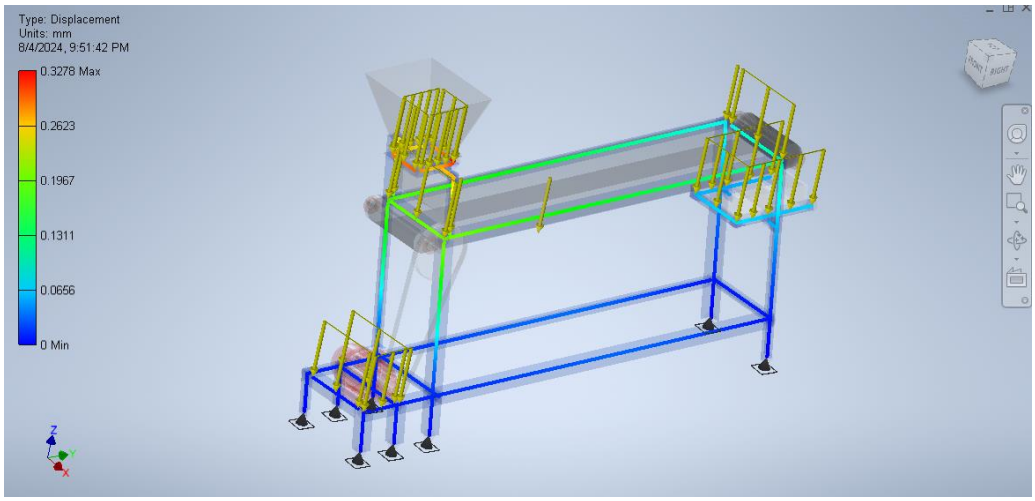

Figure 3: Simulation of the load applied to the frame of the Machine

2.5 The Induced Roller Magnetic Separator's Operating Principle

20 kg of Columbite ore will be put onto the rolling conveyor belt via the hopper. The magnetic minerals will be drawn to the magnet at the end of the conveyor. After passing through the magnetic zone, the non-magnetic minerals will be released into the non-magnetic particle collection. In order to separate the magnetic material from gangue particles, the magnetic materials will be simultaneously demagnetized from the rotating belt after exiting the magnetic zone and being freely discharged into a magnetic particle collector by centrifugal force and gravity. A number of variables, including material flow rate, grain size, pre-treatments, belt surface area, and rotational speed, influence the selection of the best separator [17]; [4]; [19].

3. Results and Discussion

3.1 Permanent Roller Performance

The performance of a permanent magnetic roller depends on a number of variables, including feed rate, belt thickness, roller disk thickness, roller diameter, roller speed, splitter placement, roller magnet intensity, magnetic susceptibility, and particle size. According to Mohanraj *et al*. [14], the feed rate, splitter position, and feed rate will be maintained constant for the purpose of the study

3.2 Roller Speed

According to Tripathy *et al*. [17], the speed of the roller is a sensitive PRMS variable which regulates performance in terms of quality and recovery. The particle spacing and the amount of time available for separation are similarly impacted by changes in roller speed [17], [6]. Thus, for three distinct belt thicknesses of 0.5, 0.75, and 1 mm, the speed of the roller will be adjusted in this investigation between 60, 120, 180, and 240 rpm. On the other hand, the remaining parameters such as splitter position (90°), and feed rate (0.05 ton/h), will be maintained constant. Additionally, the performance evaluation of the PRMS in terms of Fe recovery relative to the total amount of Fe in the feed will be done utilizing Equation (16):

$$Fe_{recovery} = \frac{(Fe\ Assay\ \% \times Weight\%)_{magnetics}}{(Fe\ Assay\ \% \times Weight\%)_{feed}} \times\ 100\% \quad (16)$$

According to this study, the Fe% of the magnetic product will rise up to 180 rpm for all belt thicknesses as the PRMS roller speed increases. For all belt thicknesses, the Fe% will rise in the moderate and non-magnetic fraction at 240 rpm, but will fall after 180 rpm as a result of rise in centrifugal force that tends to reduce particles dwell time around the magnetic field. This can be correlated with findings by Zong *et al*. [22] and is caused by increased centrifugal force and a shorter particle residence time in the magnetic field at 240 rpm.

4. Conclusions

When The design of a new dry permanent roller magnetic separator has been proposed. The machine is capable of giving about 2.2 Telsa magnetic intensity for mineral separation. Based on the other separator properties like the stability and rigidity, the machine will effectively perform the purpose with which it was design for. The cost of production of the machine will be affordable and if adopted for utilization, it will reduce importation, encouraging local manufacturing, creation of jobs, boost mineral processing and serve as means of saving the foreign exchange earnings of the nation. It can be used in mineral processing, foundry floors, teaching students and for experimental purposes.

6.0 Acknowledgement

The authors are very grateful to anonymous referees for their careful and diligent reading of the paper and helpful

suggestions. This research has not received any sponsorship

References

[1] Adetunji O.R. and Quadri A.H. Design and fabrication of an improved cassava grater. The Pacific Journal of Science and Technology. 2014; 12 (2): 120-129.

[2] Alabi, O.O., Yaro, S.A., Dungka, G.T., Asuke, F. and Hassan, B. Comparative Beneficiation Study of Gyel Columbite Ore Using Double Stage (Magnetic-to-Magnetic and Magnetic-to-Gravity) Separation Techniques. Journal of Minerals and Materials Characterization and Engineering, 2016; 4, 181-193.

[3] Dunlop F. Conveyor Handbook, Conveyor Belting in Australia. 2009.

[4] Fan P., Fan M., Liu A. Using an axial electromagnetic field to improve the separation density of a dense medium cyclone. Minerals Engineering 2015; 72 (2015) 87–93.

[5] Gupta C.K. and Krishnamurthy N., Extractive Metallurgy of Rare Earths (CRC Press, Boca Raton. 2005.

[6] Ibrahim S.S., Farahat M.M., Boulos T.R. Optimizing the performance of the RER magnetic separator for upgrading silica sands. Part. Sci. Technol. 2017; 35 21– 28. https://doi.org/10.1051/e3sconf/20185302019

[7] Is 11592: 2000 Selection and Design of Belt Conveyors — Code of Practice.

[8] Jordens A., Cheng Y.P., Waters K.E A Review of the Beneficiation of Rare Earth Element Bearing Minerals, Miner. Eng. 2013; 41,97–114.

[9] Khurmi R.S. and Gupta J.K. A Textbook of Machine Design (1st Multi-colour Ed.). S.Chand and Company Ltd., New Delhi.Miner. Eng. 2005; 41,97.

[10] Kopp J., Permanent magnet disk separators, IEEE Trans. Magn. 1984; 20, 1204– 1206.

[11] Kuphaldt T.R Variable Frequency Construction Document for Bressler Research Building,Maryland University, Baltimore.

[12] Marion C., Grammatikopoulos T., Rudinsky S., Langlois R., …Waters K.E.,. Miner. Eng. 2018; 121, 1. https://doi.org/10.1016/j.mineng.2018.02.008

[13] Martin, A. 2022. Magnetism. Online Learning College. https://online-learning-college.com/knowledge-hub/gcses/gcse-physics-

help/magnetism/#:~:text=Induced%20magnets%20produce%20much%20weaker,known%20as%20magnetically%20hard%20materials

[14] Mohanraj G.T., Rahman M.R., Sharnappa Joladarashi, Shahid Azam Rabbani. Design and fabrication of optimized magnetic roller for permanent roll magnetic separator (PRMS). Finite element method magnetics (FEMM) approach. 2021. https://doi.org/10.1016/j.apt.2021.01.003

[15] Orhan E., Gülsoy O., Importance of magnet-steel configuration in dry high intensity permanent magnetic rolls: theoretical and practical approach, Physicochem. Probl. Miner. Process. 2004; 38: 301–306.

[16] Shigley's Mechanical Engineering Design, SI version 8th (eighth) Edition by Budynas Published by MC Graw-Hill Higher Education 2007.

[17] Tripathy S.K., Banerjee P.K., Suresh N., Murthy P.K.Y., and Singh V. Dry High-Intensity Magnetic Separation in Mineral Industry – A Review of Present Status and Future Prospects, Mineral Processing and Extractive Metallurgy Review, 2017; DOI: http://dx.doi.org/10.1080/08827508.2017.1323743.

[18] Wills, B.A. Mineral Processing Technology, 6th Edition, Pergamo Press, Oxford. 2006.

[19] Wołosiewicz-Głąb M., Ogonowski S., Foszcz D. Construction of the electromagnetic mill with the grinding system, classification of crushed minerals and the control system. IFAC-Papers on Line 49-20 2016; 067–071.

[20] Yardley E.D., Stale L.R., Belt Conveying of Minerals, Woodhead Publishing Limited, Cambridge. 2008.

[21] Zhang J. and Edwards C., Review of rare earth mineral processing technology, Presented at the 44th Annual Meeting of the Canadian Mineral Processors (CIM), Ottawa, Canada. CIM J, 2013; 4, no. 1, pp. 38–52.\

[22] Zong Q.X., Fu L.Z., Bo L. Variables and Applications on Dry Magnetic Separator.School of Chemical Engineering and Technology, China University of Mining and Technology, Xuzhou, 2018; 221116, China.