JEAS

JOURNAL OF ENGINEERING AND

Journal of Engineering and Applied Sciences 3 (2007) 51 - 56

The design concept and operating principle of a voltage sensitive switching circuit (vssc)

F.O. Enemuoh, C.O. Ohaneme, B.I. Onyedika

Department of Electrical/Electronic and Computer Engineering, Nnamdi Azikiwe University, Awka, Anambra State, Nigeria

Abstract

The specific objective of this paper is to develop a Voltage Sensitive Switching Circuit (VSSC) that would achieve automatic switching of a single phase a.c. device which is designed and constructed to operate with variable input voltages in the range 170-230 volts and an output voltage level of 230 volts. The a.c. device supplies domestic appliances operated in an area where voltage fluctuations were previously experienced. The dynamic model of the VSSC considered has voltage windows that clearly defined the range of input voltages. The primary function of the scheme is to effectively monitor the a.c. mains supply through the principle of voltage comparison and automatically initiates a switching action of the a.c. device only when its comparators voltages are positive or high. Both the input and reference voltages are in the d.c. level, however, they represent a.c. level in actual fact. The scheme was tested using an autotransformer designed to give a steady output voltage of 230 volts on an input voltages in the range of 170 – 230 volts. The developed VSSC maintained successful switching of various contactors and functioned stably for the tested period on variable voltages from a variac. It is possible to achieve with the VSSC highly efficient, reliable and flexible operation.

1. Introduction

The uniqueness of the voltage fluctuations experienced in this country at consumer's terminal in the power distribution system calls for a unique approach in tackling the problem. There are basically two types of voltage variations. One is of short time duration and the other is of long time duration. The former does not formally affect our traditional electrical loads such as motors, lighting and heating applications. However, it affects some complex electronic equipment and control systems. Later disturbances which are of long term duration have to be regulated as they affect all our traditional electrical loads in an adverse manner. Every electrical appliance is designed to operate at a certain rated voltage, i.e. the best performance is obtained when rated voltage is applied.

It is essential to hold the voltage at the consumer's premises within acceptable limits of magnitude. The bulk of the solution lies in the development of an electronic circuit that monitors the mains supply and takes decision on its own to initiate a switching action that would eventually lead to the load seeing a voltage within acceptable normal range. The electronic circuit designed to achieve this purpose is the voltage sensitive switching circuit (VSSC) (Watson, 1954).

The trend in the voltage sensitive switching circuit is towards the use of operational amplifiers as comparators configured to drive power semi-conductor device linked to switch a contactor that operates a well designed single phase a.c. device operated on step input voltages within the range of 170 – 230 volts. The variable voltage input a.c. device will provide an approximately constant supply of 230 volts to domestic appliances in order to prevent the adverse affect suffered by these appliances due to voltage fluctuations.

The VSSC monitors the mains supply voltage always and through the process of voltage comparison, effectively switches a relay whose voltage tripping setting is within the mains voltage supply at that point in time. this voltage reference of the comparators as well as the input voltage are all in the d.c. voltage level. To achieve the above, voltage windows have been used to clearly define the range of voltage where the outputs from the comparators are high or positive. It is only under a high output state from a pair of

comparators configured into voltage window that a.c. device is switched (Watson, 1954).

The voltage sensitive switching circuit design described here was developed to switch contactor interfacing a variable input autotransformer with a.c. mains in order to supply consumer's appliances with constant voltage of acceptable magnitude. The autotransformer was designed and constructed to give constant 230 volts. The scheme will also find application in driving industrial loads purely fed from single phase a.c. main that are sensitive to voltage fluctuation.

The purpose of this paper is to describe the various parts of the scheme, the partitioning of functions among the units and means of interconnection chosen to efficiently implement the feature of VSSC.

2. Vssc link units

A block diagram of the VSSC is given in Fig. 1. The a.c. device is interfaced to the a.c. supply and an intelligent comparator unit coordinates the operation of the power semi-conductor switching device unit. This unit switches the relay and contractor interfacing the a.c. load. The intelligence in the comparator unit allow for implementation of voltage window defined for each relay and contractor operation.

The general function of the comparator unit is to compare a linear input voltage to another reference voltage, the output being a digital condition representing whether the input voltage exceeded the reference voltage.

A rectified supply has been provided to power the switching circuit and above all it is well filtered (especially the input to the comparator). This is necessary to eliminate the chattering of any two relays whose reference voltages are nearer to the input. The problem of chattering necessitated the incorporation of delay unit to offset this effect.

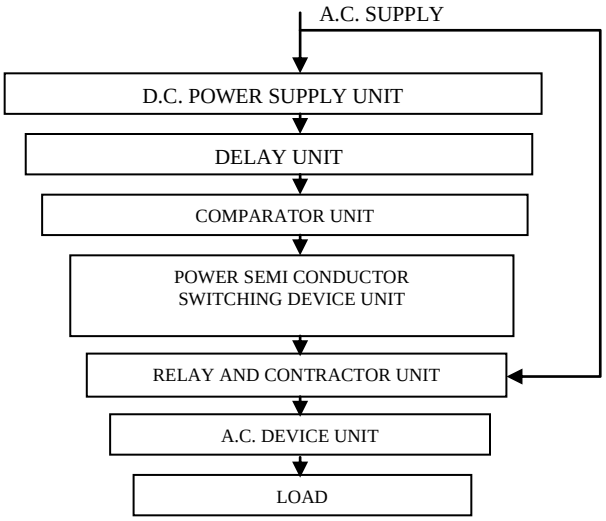

Fig. 1. VSSC. block diagram.

The a.c. device is a variable input autotransformer used in many domestic low voltage powered appliances and can also be used in industries for motors. Fig. 8 is a more detailed diagram of the VSSC, showing the individual circuits interconnected. The output of the power supply formed the input to the delay circuit. The quad comparator containing four independent voltage comparators give an application in which the outputs from more than one circuit can be wire-ored. Through this principle, voltage windows are established in which the output from any wire-ored combination of any two comparators will be high as long as the voltage range defined by the voltage window and low if otherwise. The power switching semi-conductor is the NPN transistor. Further details of the function of each circuit and of the communication between them are given in the sections that follow.

3. Power supply unit

The basic circuit of the power supply unit is shown in Fig. 8. The special feature of the circuit is the capacitors C_3 and C_4; these crucial capacitors effectively reduce the cause of chattering mentioned above.

4. Comparator unit

The IC comparator used in the design is a quad comparator Lm339, containing four independent voltage comparators. Each comparator has inverting and non-inverting inputs and a single output as shown in Fig. 2. The LM339 comparator used has an open circuit collector output and hence two possible output states naturally exist for it. The states are: an output giving an open circuit and the other an output giving a low output.

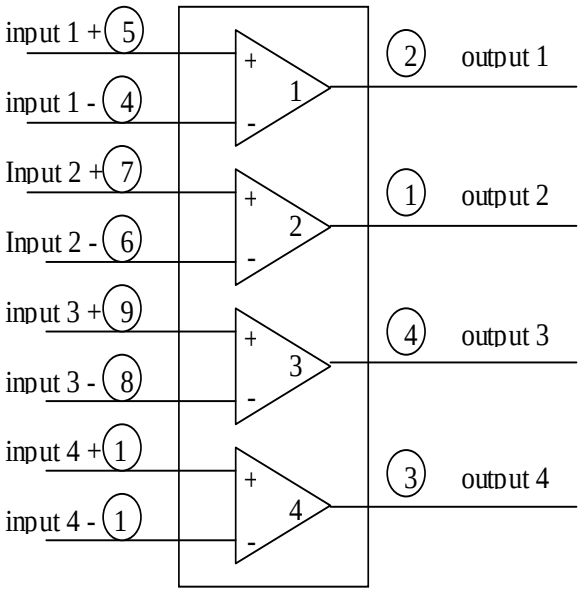

Fig. 2. Quad comparator IC LM339.

The obtaining of any of these states of output depends on which of the input (+ or -) is used as reference.

The differential input voltage (difference in voltage across input terminals) going positive drives the output transistor off (open circuited) while a negative differential input voltage drives the output transistor on, giving an output equal to the supply i.e. low level (V^L_o).

If the positive input is set at the reference level, the inverting input going below V_{ref} results in the output open circuited, while the inverting input going above V_{ref} results in the output at V^- (i.e. V^L_o).

However, the Lm 339 can still be made to give yet another output state, this time a high output state approaching V^+ (V^H_o). This is made possible by connecting a resistor between the positive line (V+) and the output pin of the comparator as shown in Fig. 3 (Watson, 1954).

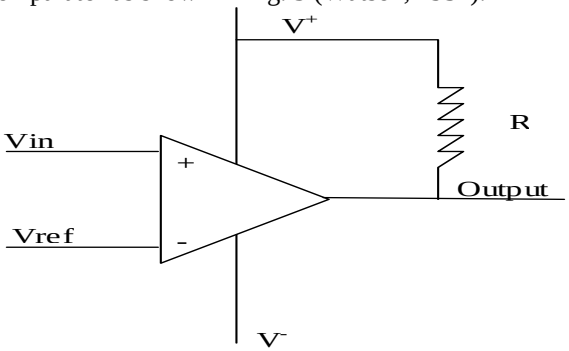

Fig.3. Configuration for a high output state.

Thus through this configuration the Lm 339 can be made to switch either to the high output state or low output state. Fig. 4 shows the establishment of comparator voltage window. (Boylesstand and Nashesky, 1992). The + Vcc is a filtered rectified supply that comes from a voltage regulator (to ensure a constant output). Now using the voltage divider, R1 and R2 sets a voltage reference for the 1st comparator (establishing the upper limit of the window) while R3 and R4 sets the reference voltage for the 2nd comparator (establishing the lower limit of the window). The 1st reference voltage is at the non-inverting terminal and thus an input at

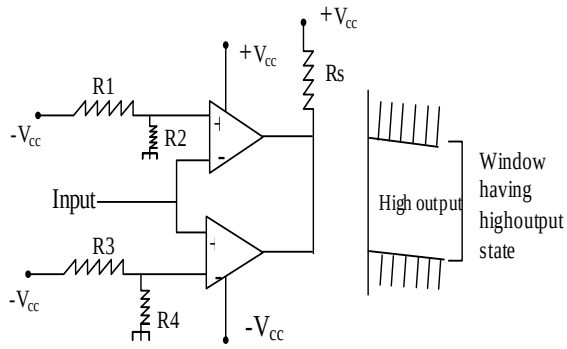

Fig. 4. VSSC voltage window.

its inverting ensures that when the input is lower than Vref, the output is high, but becomes low if the reverse is the case.

The second reference voltage is at the inverting terminal ensures that when the input is lower than Vref, the output is low, but becomes high if otherwise.

The expression aiding in the calculation of reference voltage for the comparators can be derived considering the circuit of Fig. 5 (Boylesstand and Nashesky, 1992).

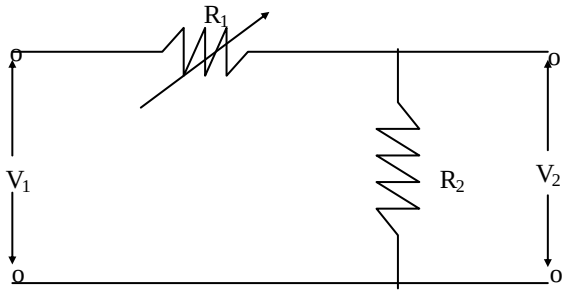

Fig. 5. Circuit for reference voltage.

$$\frac{V_2}{V_1} = \frac{R_2}{R_1 + R_2}$$

The uniqueness of using this principle is the possibility of establishing wide range of windows as may be desired by the VSSC designer.

5. Semi conductor Switching Device Unit

The semi conductor switching device used in the design is NPN type in the common emitter configuration. The objective is realized by operating the transistor on the saturation and cut off regions in order to achieve its switching mode.

The development of the overall circuit began with the basic principle of manipulation of the voltage applied between the base and the emitter junction of the transistor. The input pulse applied at the base of the transistor is of the waveform shown in Fig. 6 The waveform shown will operate the transistor at the cut off and saturation region with a circuit outlook of Fig. 7 (Jacob and Christos, 1972).

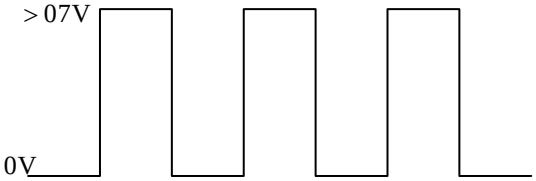

Fig. 6. Waveform of the input voltage at the base of transistor to achieve switching.

The desire to get an input voltage of the waveform shown in Fig. 6 led to the incorporation of an operation

Amplifier which when configured as a comparator output produces outputs that are either in the high output state or low output state.

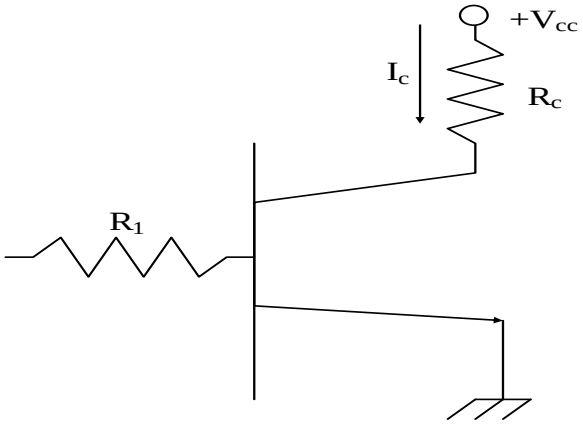

Fig.7. Transistor operating in switching mode.

However, the low output state in this case is not zero (about 0.23 v). (Bishop et al., 1984)

Therefore to ensure that the base of the transistor actually sees a 0 v when the comparator output is low (to ensure full cut-off) a zener was introduced and placed in the reverse bias mode to the base of the transistor. Therefore, the voltage at the anode side of zener would be zero (0 v) if the applied voltage across the zener is less than its breakdown voltage.

6. A.C. Device unit

The a.c. device in the design is an autotransformer. It is a device in which parts of one winding are common to both the primary and the secondary wound from conductors of different cross section.

The principle of operation is almost similar to that of an ordinary transformer based on the principle of magnetic induction except that in the case of an autotransformer the power transferred to the load is a sum of an electromagnetically transformed power and a conductively transferred power. It has both inductive and conductive coupling between its windings. However, the variable autotransformer is to be distinguished from the ordinary autotransformer by the tapings made on one of the windings to provide connections to different levels of voltages (Onyedika, 1997).

The advantages of the autotransformer over an ordinary transformer of the same capacity are:

i. Reduction in the amount of the winding wire and steel used.
ii. It has lower power loss.
iii. It has higher efficiency and a lower variation in voltage with changes of load in the device.

The applications are:

i. In situation involving low voltage, as in reduced voltage, for example in starting of motors.
ii. It is used to power domestic appliances and control system units.
iii. It is also used for interconnecting systems that are operating at roughly the same voltage.

The various relays of the VSSC are linked to the various inputs of the autotransformer. Each input is operated for the specified voltage window of the comparator. The voltage window actually represented the step input voltages that will represent the autotransformer input based on its design.

At various inputs of the autotransformer, the analysis based on turns ratio will still give a steady output voltage in these case 230 volts.

7. Operating principle and performance test

Individual units (circuits) were constructed and connected to realize the overall system. The design operated six different relays/ contractors (RYC). The voltage ranges were set as in Table. 1. The voltage ranges are in a.c. levels. To achieve Table. 1 a very convenient equivalent d.c. voltage levels were chosen as the input to the comparator with well clearly defined voltage references. The voltage references so chosen equally are the equivalent d.c. levels of the a.c. levels in consideration. Thus as the comparator carefully compares its input at any point in time with the reference voltage, it is invariably comparing two a.c. levels in actual fact.

The voltage references to the comparator are: 4.4,4 V, 4.7 V, 5 V, 5.2 V, 5.5 V, 5.7 V and 6 V (all in d.c level). 6 V d.c represents 230 V a.c, therefore the corresponding levels for the other d.c levels were as follows:

5.7 V d.c represents 220 a.c
5.5 V d.c represents 210 a.c
5.2 V d.c represents 200 a.c
5.0 V d.c represents 190 a.c
4.7 V d.c represents 180 a.c
4.4 V d.c represents 170 a.c

Table 2. shows the a.c voltage ranges with their corresponding d.c voltage ranges and the relay/contactor that is ON within the range.

The principle of using comparators to establish voltage windows is the fundamental tool in realizing Table 2. This ensures that within the set reference voltage, only the relay whose comparator input falls within the range is ON while others are OFF.

Table 1
Voltage ranges and relays/contactors operations

<170 V	170 – 180 V	180 – 190 V	190 – 200 V	200 – 210 V	210 – 220 V	220 – 230 > 230 V
All Relays Contact OFF	RYC1 ON RYC2 off RYC3 off RYC4 off RYC5 off RYC6 off	RYC2 off RYC2 ON RYC3 off RYC4 off RYC5 off RYC6 off	RYC1 off RYC2 off RYC3 ON RYC4 off RYC5 off RYC6 off	RYC1 off RYC2 off RYC3 off RYC4 ON RYC5 off RYC6 off	RYC1 off RYC2 off RYC3 off RYC4 off RYC5 ON RYC6 off	RYC1 off RYC2 off RYC3 off RYC4 off RYC5 off RYC6 ON

Contact = Contactor

Table 2
A.C. voltage ranges and their corresponding D.C voltage ranges

Equivalent d.c voltage range	Equivalent a.c voltage range	RYC1	RYC2	RYC3	RYC4	RYC5	RYC6
4.4 V	<170 V 0	0	0	0	0	0	
4.4 – 4.7 V	170 – 180 V	1	0	0	0	0	0
4.7 – 5.0 V	180 – 190 V	0	1	0	0	0	0
5.0 – 5.2 V	190 – 200 V	0	0	1	0	0	0
5.2 – 5.5 V	200 – 210 V	0	0	0	1	0	0
5.5 – 5.7 V	210 – 220 V	0	0	0	0	1	0
5.7 – 6 V	220 – 230 V	0	0	0	0	0	1
>6 V	>230 V 0	0	0	0	0	0	

ON = 1, off = 0, RYC = Relay/Contactor

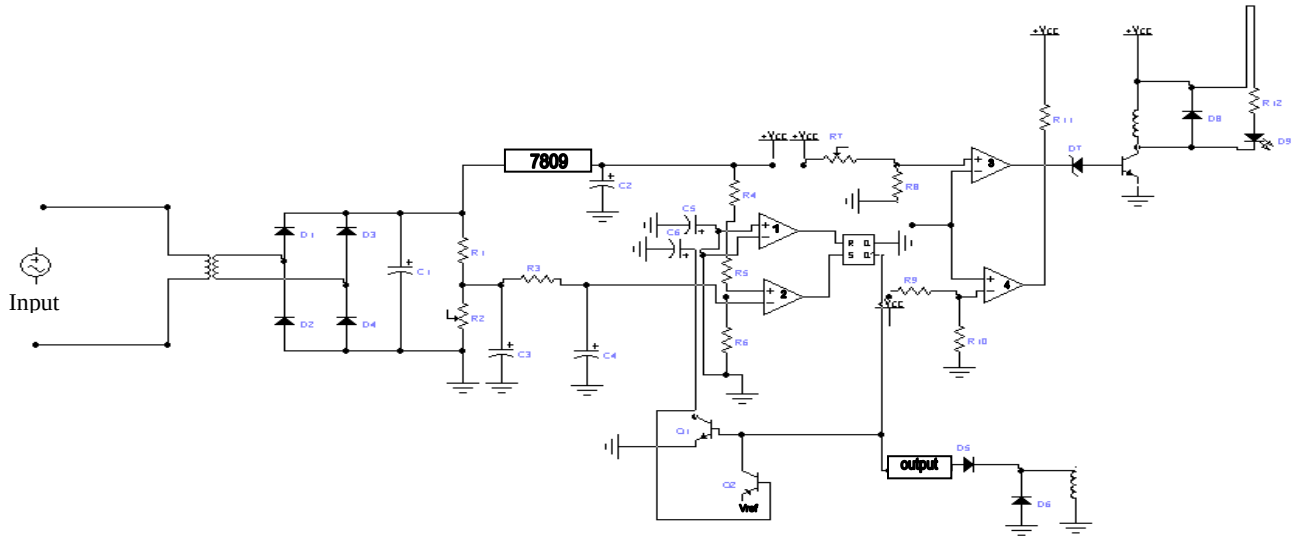

Fig. 8. The complete diagram of the voltage sensitive circuit (VSSC).

8. Conclusions

A design has been proposed for voltage sensitive switching circuit. The design involved the use of power supply, quad comparators, semiconductor devices and variable input a.c device. The functions of various units of the scheme was described and the interconnections between them shown diagrammatically. The design handled the problem experienced in some parts of the country. The design is cheap when compared to the cost that will be incurred by frequent replacement of consumers appliances. Indeed, those costs will be more than offset by savings realized from the increased functionality, flexibility and maintainability of the VSSC.

References

Bishop, O. N., Anyanwu, I. J., Oloapde, O.L., 1984. Basic Electronics. Macmillan Publishers, New York.

Boylesstand, R., Nashesky, I., 1992. Electronic Devices and Circuit Theory. 5th ed., Prentice-Hall of India Private Ltd., India.

Edward, H., 1988. Electrical Technology. 6th ed., Longman Publishers, London.

Jacob, M., Christos, H., 1972. Integrated Electronics International. McGraw-Hill, Singapore.

Onyedika, B. I., 1997. Design Analysis and Construction of Voltage Sensitive Switching Circuit. B.Eng. Thesis, Department of Electrical/Electronic and Computer Engineering, Nnamdi Azikiwe University, Awka. October, 1997.

Watson, J., 1954. Analog and Switching Circuit Design. J.W. Arrowsmith Ltd, Bristol.