UJEAS

UNIZIK JOURNAL OF ENGINEERING AND APPLIED SCIENCES

UNIZIK Journal of Engineering and Applied Sciences 6(2), June (2026), 3583-3594
Journal homepage: https://journals.unizik.edu.ng/index.php/ujeas
PRINT ISSN: 2992-4383 || ONLINE ISSN: 2992-4391

Development of sensitivity index-based technique for unified power flow controller placement with contingency analysis on Nigeria 330Kv transmission network

Nwogbu Celestine Chidi[1], Chukwuagu Ifeanyi[2], Adindu Charles .O.[3]

Material and Metallurgy Department Enugu State University of Science and Technology, Enugu OSISATECH Polytechnic OWO Enugu state, Department of Electrical/Electronic Engineering, Caritas University Amorji-Nike, Emene, Enugu, Department of Electrical/Electronic Engineering

*Corresponding Author's E-mail: chukwuaguifeanyi35@gmail.com

Abstract

Persistent power failure that disrupted business activities was mainly caused by poor placement of the Unified Power Flow Controller (UPFC) due to voltage instability in the Nigerian 330 kV transmission network. This study developed a Sensitivity Index–Based Technique for Optimal UPFC Placement with Contingency Analysis to improve system stability. Load flow analysis was first conducted to identify weak buses whose voltage levels fell outside the acceptable stability range of 0.95 through1.05 p.u. A conventional UPFC placement model was designed and compared with the proposed sensitivity index–based technique implemented using a SIMULINK model. Results showed that the conventional system produced a bus voltage of 0.909 p.u. at Bus 4 and line loading sensitivity of 75%, indicating instability. However, when the proposed technique was applied, the voltage improved to 1.05 p.u. and line loading sensitivity increased to 90%. This represents a 15% improvement in system performance, demonstrating that the sensitivity index–based technique significantly enhances UPFC placement and voltage stability in the Nigerian 330 kV transmission network.

Keywords: Development ,sensitivity, index, based, technique, unified, power, flow, controller, placement ,contingency, analysis, Nigeria, 330kv, transmission, networ

1. Introduction

The reliable and efficient operation of large-scale power transmission networks is a persistent challenge for modern power systems, particularly in developing economies such as Nigeria, where infrastructural limitations and increased demand place significant stress on existing grid architecture. Power systems are expected to maintain voltage stability, minimize losses, and sustain secure operation under both normal operating conditions and contingency events such as line outages, generator failures, or sudden load changes — which can precipitate system instability and performance degradation (Alajrash et al., 2024; Sambo, 2018). Contingency analysis plays a crucial role in identifying and preparing for such adverse scenarios by evaluating the reliability and security of network operation when critical components fail, allowing system planners to anticipate violations of operating limits and design corrective measures (Sambo, 2018; Energy Central, 2024). Flexible Alternating Current Transmission Systems (FACTS) devices, and in particular the Unified Power Flow Controller (UPFC), have emerged as effective power electronic tools for enhancing transmission system performance. UPFCs can simultaneously regulate real and reactive power flow, adjust bus voltages, control phase angles, and improve overall system stability and transfer capability (Alajrash et al., 2024). The efficacy of UPFCs in enhancing system security and voltage profile has been demonstrated in diverse transmission networks, with recent research highlighting improvements in voltage magnitude and power flow control under stressed conditions when UPFCs are optimally deployed (Ndjankeu et al., 2025). Despite these benefits, the practical application of UPFCs is constrained by their high investment cost and complex integration. Consequently, optimal

placement and sizing of UPFC units are critical to maximizing their impact on network performance while minimizing costs.

Sensitivity index–based methods have become a widely accepted approach to determine suitable locations for FACTS devices, as they quantify how sensitive critical system performance indices (such as voltage, power losses, or line loading) are to changes in network parameters. Modern sensitivity indices, including the Modern Stability Assessment Index (MSAI), integrate both normal and contingency operating conditions to identify critical network elements for UPFC installation, enhancing power quality and loading capacity (Ndjankeu et al., 2025). Such index-based methodologies enable planners to prioritize installation sites that yield the greatest improvement in stability and security, particularly under N-k contingency scenarios. The electric power system is a critical infrastructure that must operate within acceptable voltage and frequency limits to ensure stability, reliability, and quality of supply. However, the Nigerian 330 kV transmission network has been characterized by persistent instability, voltage violations, high transmission losses, and frequent contingencies resulting from line outages, equipment failures, and load fluctuations (Okakwu & Ogujor, 2017; Ibe & Victor, 2017) . These challenges have significantly affected power delivery, leading to unreliable electricity supply and reduced system performance across the grid. Contingency analysis has been widely adopted as a fundamental tool for assessing the security of power systems under abnormal operating conditions. It enables the prediction of system behavior when subjected to disturbances such as transmission line outages or generator failures. However, conventional contingency evaluation methods in large-scale systems like the Nigerian grid are computationally intensive and often rely on sequential or offline analysis, making them inefficient for real-time decision-making (Ibe & Victor, 2017) . Furthermore, these traditional approaches lack effective prioritization mechanisms for identifying the most critical contingencies affecting system stability. To address these limitations, Flexible Alternating Current Transmission System (FACTS) devices, particularly the Unified Power Flow Controller (UPFC), have been introduced to enhance power flow control, improve voltage profiles, and reduce transmission losses. Studies have shown that optimal placement of UPFC devices significantly enhances voltage stability and minimizes power losses in the Nigerian transmission network (Amadi, 2021; Madueme & Onyegbadue, 2019) . Despite these improvements, the effectiveness of UPFC largely depends on its optimal location and sizing within the network, which remains a complex optimization problem.

Several researchers have explored different techniques for determining the optimal placement of UPFC, including Newton-Raphson load flow methods, sensitivity analysis, voltage stability indices, and artificial intelligence-based approaches (Chukwuagu et al., 2023; Kalunta & Ngwu, 2022) . Sensitivity-based methods, in particular, have gained attention due to their ability to identify weak buses and critical lines in the network. However, many existing studies focus on single contingency scenarios or static operating conditions, thereby limiting their applicability in real-world systems where multiple contingencies can occur simultaneously. Recent advancements have incorporated intelligent techniques such as Artificial Neural Networks (ANN) and neuro-fuzzy systems for improving contingency prediction and system stability. These approaches have demonstrated improved accuracy in identifying and mitigating faults within the Nigerian 330 kV grid (Chukwuagu et al., 2024) . Nonetheless, these methods often lack a structured sensitivity index framework that quantitatively ranks contingency severity while simultaneously guiding optimal UPFC placement. The concept of sensitivity index-based techniques provides a more systematic approach by quantifying the impact of system disturbances using performance indices such as Active Power Performance Index (APPI) and Reactive Power Performance Index (RPPI). These indices enable the identification of the most critical buses and transmission lines under contingency conditions, thereby facilitating optimal placement of FACTS devices. Previous work has demonstrated that incorporating sensitivity indices with contingency analysis can significantly reduce reactive power losses and improve voltage profiles in the Nigerian 330 kV network However, such approaches are still limited in integration depth, validation scope, and adaptability to multiple contingency scenarios.

Research Gap and Novelty of the Study

Despite extensive research on UPFC placement and contingency analysis, there remains a significant gap in the development of a comprehensive, sensitivity index-based framework that simultaneously addresses multi-contingency conditions, optimal device placement, and real-time system performance evaluation in the Nigerian 330 kV transmission network. Existing studies either focus on optimization without detailed contingency ranking, or on contingency analysis without integrating an effective sensitivity-based placement strategy. This study bridges this gap by developing a novel sensitivity index-based technique that integrates multi-contingency analysis with optimal UPFC placement. The innovation lies in the combined use of Active and Reactive Power Performance Indices for precise severity ranking, alongside systematic identification of weak buses under multiple outage scenarios. Unlike

previous methods that consider single disturbances or isolated optimization strategies, this approach provides a holistic and adaptive framework capable of enhancing voltage stability, minimizing power losses, and improving overall grid reliability. Furthermore, the study introduces an improved decision-making mechanism for FACTS device placement, validated on the Nigerian 330 kV transmission network, thereby contributing a practical and scalable solution to real-world power system challenges. This integrated methodology represents a significant advancement over conventional and AI-based approaches by offering higher accuracy, better contingency handling, and improved operational efficiency, thus establishing its novelty and relevance in modern power system optimization research.

2.0 Materials and methods

To characterize Unified Power Flow Controller Placement with Contingency Analysis on Nigeria 330KV Transmission Network

Table 1: 330KV transmission network characterized data collected from Enugu

Bus No	Bus code	P.U	Ang Deg	Load MW	Load Mvar	Gen MW	Gen Mvar	Inject Min	Inject Max	Inject Mvar
1	1	0.7	0	00.0	0.0	0.0	0.0	0	0	0
2	0	1.025	0	00.0	0.0	0.0	0.0	0	0	0
3	0	0.94	0	150.0	120	0.0	0.0	0	0	0
4	0	0.94	0	0.0	0.0	0.0	0.0	0	0	0
5	0	0.8	0	120.0	60	0.0	0.0	0	0	0
6	0	1.0	0	140.0	90	0.0	0.0	0	0	0
7	0	0.87	0	0.0	0.0	0.0	0.0	0	0	0
8	0	1.01	0	110.0	90.0	0.0	0.0	0	0	0
9	0	0.97	0	80.0	50.0	0.0	0.0	0	0	0
10	2	1.0	0	0.0	0.0	200	0.0	0	180	0
11	2	1.042	0	0.0	0.0	160	0.0	0	120	0

Table 2: Characterization of Causes of Poor UPFC Placement with Metric Thresholds (SI Units)

S/N	Cause of Poor UPFC Placement	Technical Characterization	Key Metric / Index	Threshold / Limit (SI Units)	conventional causes of poor UPFC placement with metric	Impact on 330 kV Network
1	Incorrect Voltage Sensitivity Assessment	UPFC placed on buses with low voltage sensitivity to contingencies	Bus Voltage Magnitude (V)	$0.95 \leq V \leq 1.05$ p.u.	0.9	Ineffective voltage support during N-1 contingencies
2	Inadequate Line Loading Sensitivity	Placement ignores critical overloaded corridors	Line Loading (%)	$\leq 80\%$ (Normal) $\leq 100\%$ (Emergency)	75%	Persistent congestion and thermal violations
3	Poor Contingency Severity Ranking	UPFC not placed on lines with high contingency impact	Performance Index (PI)	$PI \leq 1.0$ (Secure)	0.7	Inability to mitigate severe N-1 line outages

4	High Transmission Loss Zones Ignored	UPFC installed in low-loss areas	Active Power Loss (MW)	$\Delta P_loss \geq 5–10\%$ reduction expected	2%	Minimal loss minimization benefit
5	Weak Bus Misidentification	Failure to identify voltage-weak buses	Voltage Stability Index (VSI)	VSI ≥ 0.90 (Stable) VSI < 0.90 (Weak)	0.8	Voltage collapse risk under contingency
6	Poor Reactive Power Sensitivity	UPFC not placed where reactive support is critical	Reactive Power Margin (Mvar)	$Q_margin \geq 15–20\%$	12%	Insufficient voltage recovery
7	Ignoring Short-Circuit Level Constraints	UPFC installed at buses with low fault strength	Short Circuit Ratio (SCR)	SCR ≥ 3.0	5.0	Control instability and protection issues

```
>> %To run the load flow to identify the faulty buses that the per unit volts
%could not attain voltage stability of 0.95 through 1.05% disp('')
basemva = 1000; accuracy = 0.0001;  maxiter = 10;
% The impedances are expressed on a 1000 MVA base.
%      Bus Bus   |V|  Ang   ---Load---      ---Gen---   Gen Mvar Injected
%      No.  code p.u.  Deg   MW     Mvar   MW   Mvar   Min   Max    Mvar
busdata=[1    1   0.7    0    00.0    0.0     0.0   0.0    0     0    0
       2    0   1.025    0    21.70    0.0     0.0   0.0    0     0    0
       3    0   0.94      0      2.4 120.0     0.0   0.0    0     0    0
       4    0   0.94    0    7.6    0.0     0.0   0.0    0     0    0
       5    0   0.8    0   94.2   60.0     0.0   0.0    0     0    0
       6    0   1.0    0     0.0   90.0     0.0   0.0    0     0    0
       7    0   0.87    0   22.8    0.0     0.0   0.0    0     0    0
       8    0   1.01    0   30.0   90.0     0.0   0.0    0     0    0
       9    0   0.97    0    0.0   50.0     0.0   0.0    0     0    0
       10   2   1.0 0     5.8    0.0   200.0   0.0    0    180   0
       11   2   1.042   0     0.0    0.0   160.0   0.0    0    120   0];

%       Bus   Bus     R        X       1/2B
%       No.   No.    p.u.     p.u.     p.u.
linedata=[1     2     0.00     0.06     0.0000    1
       2     3     0.08     0.30     0.0004    1
       2     6     0.12     0.45     0.0005    1
       3     4     0.10     0.40     0.0005    1
       3     6     0.04     0.40     0.0005    1
       4     6     0.15     0.60     0.0008    1
       4     9     0.18     0.70     0.0009    1
       4    10     0.00     0.08     0.0000    1
       5     7     0.05     0.43     0.0003    1
       6     8     0.06     0.48     0.0000    1
       7     8     0.06     0.35     0.0004    1
       7    11     0.00     0.10     0.0000    1
       8     9     0.052    0.48     0.0000    1]; %        Gen.  Ra     Xd'm gendata=[ 1     0     0.20
       10    0     0.15
       11    0     0.25];
    lfybus                    % Forms the bus admittance matrix
    lfnewton            % Power flow solution by Newton-Raphson method
```

```
busout              % Prints the power flow solution on the screen
Zbus=zbuildpi(linedata, gendata, yload)%Forms Zbus including the load
symfault(linedata, Zbus, V)    % 3-phase fault including load current
```

Power Flow Solution by Newton-Raphson Method
Maximum Power Mismatch = 1.10601e-007
No. of Iterations = 10

Bus No.	Voltage Mag.	Angle Degree	------Load------ MW	Mvar	---Generation--- MW	Mvar	Injected Mvar
1	0.700	0.000	0.000	0.000	-146.639	-223.830	0.000
2	0.719	1.001	21.700	0.000	0.000	0.000	0.000
3	0.782	2.905	2.400	120.000	0.000	0.000	0.000
4	0.909	4.201	7.600	0.000	0.000	0.000	0.000
5	0.926	0.958	94.200	60.000	0.000	0.000	0.000
6	0.799	2.980	0.000	90.000	0.000	0.000	0.000
7	0.960	3.376	22.800	0.000	0.000	0.000	0.000
8	0.870	3.349	30.000	90.000	0.000	0.000	0.000
9	0.869	3.963	0.000	50.000	0.000	0.000	0.000
10	0.950	5.231	5.800	0.000	200.000	484.560	0.000
11	0.992	4.338	0.000	0.000	160.000	318.466	0.000
Total			184.500	410.000	213.361	579.195	4.300

Result of the load flow

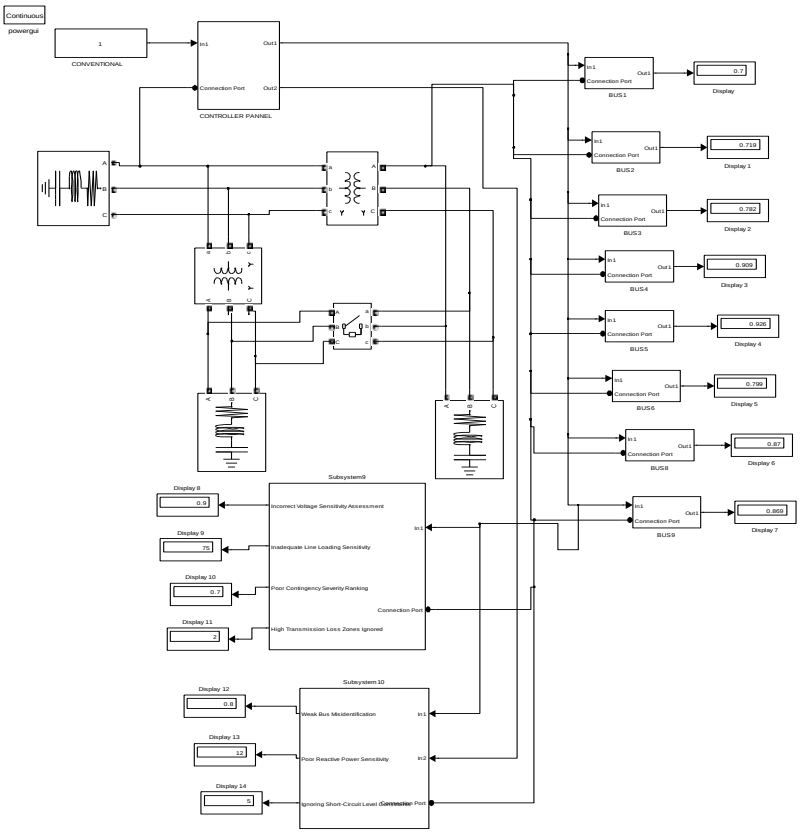

Fig 1: designed conventional model for Unified Power Flow Controller Placement with Contingency Analysis on Nigeria 330KV Transmission Network

The faulty buses that could not attain voltage stability of 0.95 through 1.05 P.U. V were buses 1, 2, 3, 4, 5, 6,8 and 9 with per unit volts of 0.700 P.U. V, 0.719 P.U. V, 0.782 P.U. V, 0.909 P.U.V, 0.926 P.U.V , 0.799 P.U.V, 0.870 P.U.V and 0.869 P.U.V. The load flow was run from the empirical data or 330KV transmission network characterized data collected from Enugu as shown in table 1 to identify the faulty buses that their per unit volts could not attain the threshold of 0.95 P.U. V through 1.05 P.U.V. The load flow was run from the empirical data or 330KV transmission network characterized data collected from Enugu as shown in table 1 to identify the faulty buses that their per unit volts could not attain the threshold of 0.95 P.U. V through 1.05 P.U.V. To design a conventional model for Unified Power Flow Controller Placement with Contingency Analysis on Nigeria 330KV Transmission Network. The results obtained were as shown in figures 4 and 5. To design a SIMULINK model for development of sensitivity index based technique

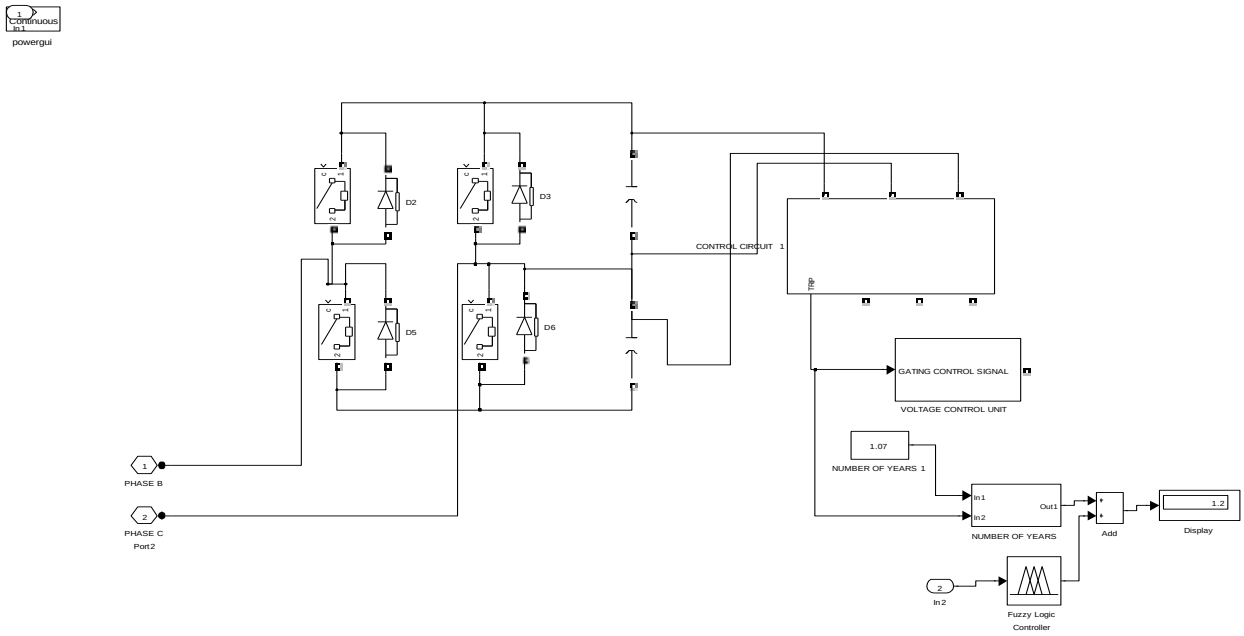

Fig 2: designed SIMULINK model for development of sensitivity index based technique

This was integrated to the conventional in figure 1 to obtain the results shown in figures 4 and 5

To develop an algorithm that would implement the process

1. Characterize Unified Power Flow Controller Placement with Contingency Analysis on Nigeria 330KV Transmission Network.
2. Run the load flow to Identify the faulty buses that the per unit volts could not attain voltage stability of 0.95 through 1.05
3. Identified faulty buses; bus1, bus2, bus3, bus4, bus5, bus6, bus 8 and bus9
4. Identify Incorrect Voltage Sensitivity Assessment that could not attain threshold from the faulty buses
5. Identify Inadequate Line Loading Sensitivity that could not attain threshold from the faulty buses
6. Identify Poor Contingency Severity Ranking that could not attain threshold from the faulty buses
7. Identify High Transmission Loss Zones Ignored that could not attain threshold from the faulty buses
8. Identify Weak Bus Misidentification that could not attain threshold from the faulty buses
9. Identify Poor Reactive Power Sensitivity that could not attain threshold from the faulty buses
10. Identify Ignoring Short-Circuit Level Constraints that could not attain threshold from the faulty buses
11. Design a conventional model for Unified Power Flow Controller Placement with Contingency Analysis on Nigeria 330KV Transmission Network2through10
12. Design a SIMULINK model for development of sensitivity index based technique.
13. Integrate 12 into 11
14 Did the faulty buses attain voltage stability when 12 was integrated into 11?
15. IF NO go to 13
16. IF YES go to 20

17. Did the conventional causes of poor UPFC placement with metric that could not attain threshold attained when12 was integrated into 11?
18. IF NO go to 13
19. IF YES go to 20
20. Improved unified power flow controller placement with contingency analysis on Nigeria 330kv transmission network
21. Stop
22. End

To design a SIMULINK model for development of sensitivity index based technique for unified power flow controller placement with contingency analysis on Nigeria 330kv transmission network

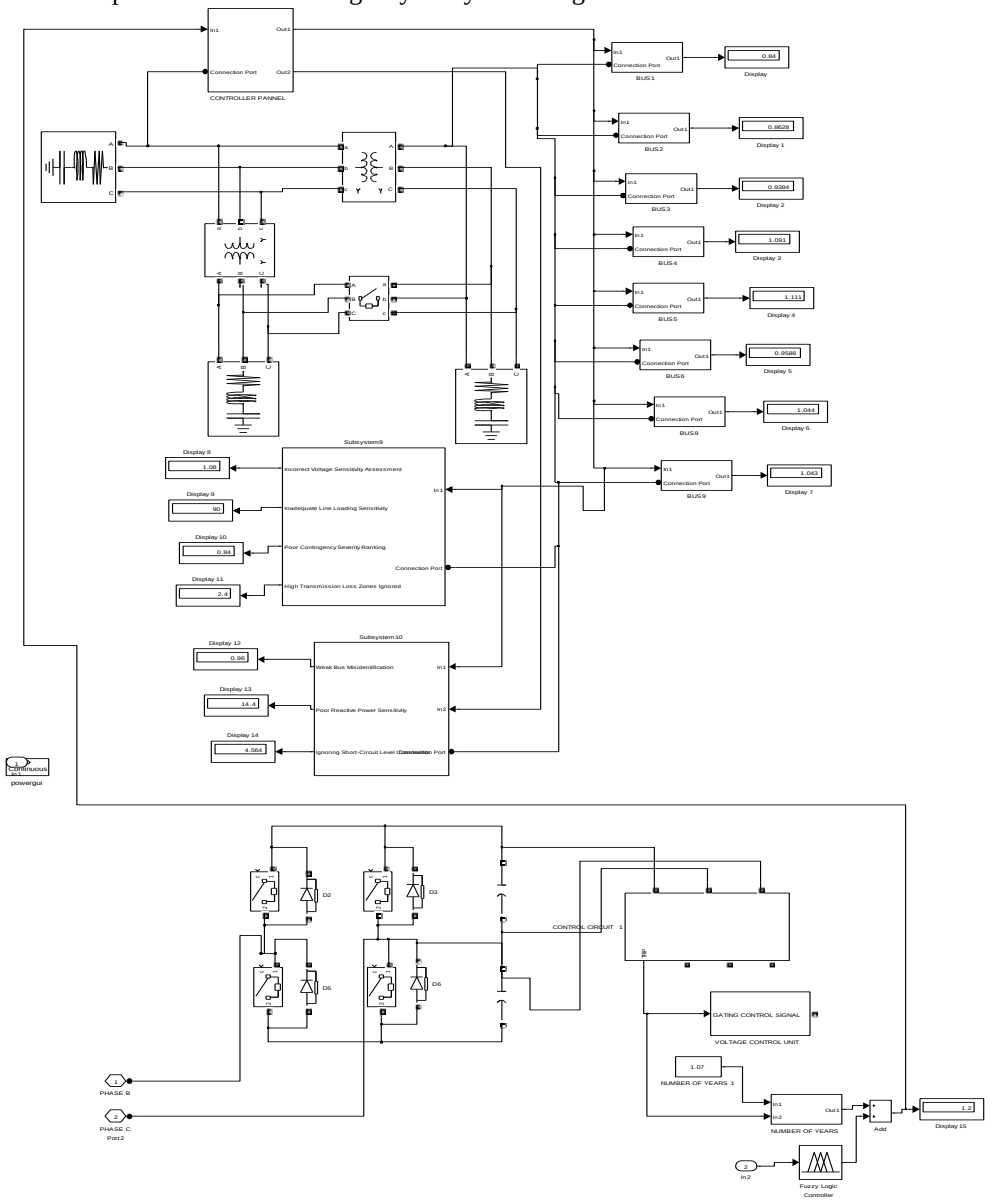

Fig 3: designed SIMULINK model for development of sensitivity index based technique for unified power flow controller placement with contingency analysis on Nigeria 330kv transmission network

The results obtained were fully detailed in figures 4 and 5. To validate and justify the percentage improvement in unified power flow controller placement contingency analysis on Nigeria 330kv transmission network with and without development of sensitivity index based technique. To find percentage improvement in bus 4 that could not attain voltage stability in unified power flow controller placement contingency analysis on Nigeria 330kv transmission

network with development of sensitivity index based technique
Conventional bus 4 voltage =0.909 P.U.V
Development of sensitivity index based technique bus 4 voltage= 1.05 P.U.V
% improvement in bus 4 that could not attain voltage stability in unified power flow controller placement contingency analysis on Nigeria 330kv transmission network with development of sensitivity index based technique=

$$\frac{\text{Development of sensitivity index based technique bus 4 voltage- Conventional bus 4 voltage}}{\text{Conventional bus 4 voltage}} \times \frac{100\%}{1}$$

% improvement in bus 4 that could not attain voltage stability in unified power flow controller placement contingency analysis on Nigeria 330kv transmission network with development of sensitivity index based technique=

$$\frac{1.05\ \text{P.U.V} - 0.909\ \text{P.U.V}}{0.909\ \text{P.U.V}} \times \frac{100\%}{1}$$

% improvement in bus 4 that could not attain voltage stability in unified power flow controller placement contingency analysis on Nigeria 330kv transmission network with development of sensitivity index based technique=15.5%. To find percentage improvement Inadequate Line Loading Sensitivity that could not attain threshold in unified power flow controller placement contingency analysis on Nigeria 330kv transmission network with development of sensitivity index based technique. Conventional Inadequate Line Loading Sensitivity that could not attain threshold =75%. Development of sensitivity index based technique Inadequate Line Loading Sensitivity that could not attain threshold = 90%
% improvement in Inadequate Line Loading Sensitivity that could not attain threshold in unified power flow controller placement contingency analysis on Nigeria 330kv transmission network with development of sensitivity index based technique=
Development of sensitivity index based technique Inadequate Line Loading Sensitivity that could not attain threshold - Conventional Inadequate Line Loading Sensitivity that could not attain threshold % improvement in inadequate line loading sensitivity that could not attain threshold in unified power flow controller placement contingency analysis on Nigeria 330kv transmission network with development of sensitivity index based technique=90% - 7% improvement in Inadequate Line Loading Sensitivity that could not attain threshold in unified power flow controller placement contingency analysis on Nigeria 330kv transmission network with development of sensitivity index based technique= 15%

3.0: Result and Discussion

Table 3: comparison of conventional and development of sensitivity index based technique bus 4 voltage that could not attain voltage stability in unified power flow controller placement contingency analysis on Nigeria 330kv transmission network

Time (hrs)	Conventional bus 4 voltage that could not attain voltage stability in unified power flow controller placement contingency analysis on Nigeria 330kv transmission network(P.U.V)	Development of sensitivity index based technique bus 4 voltage that could not attain voltage stability in unified power flow controller placement contingency analysis on Nigeria 330kv transmission network(P.U.V)
1	0.909	1.05
2	0.909	1.05
3	0.909	1.05
4	0.909	1.05

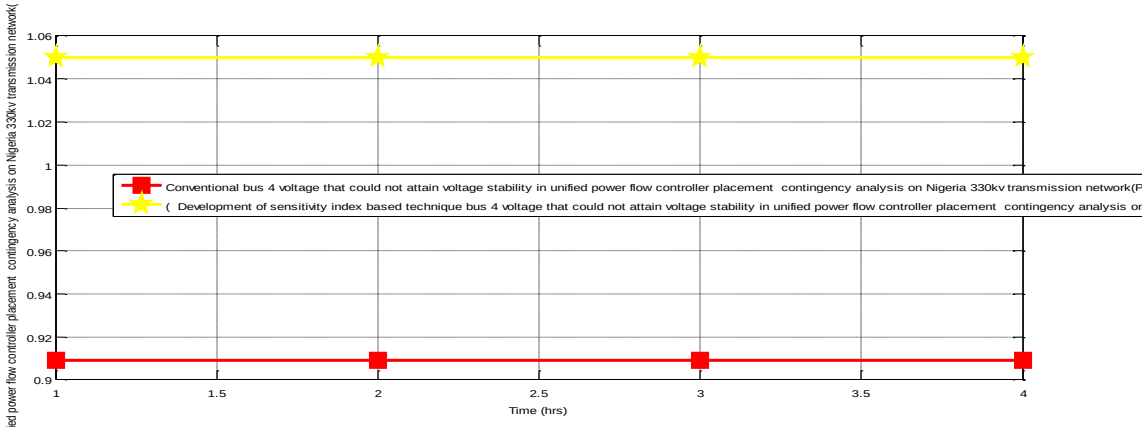

Fig 4: comparison of conventional and development of sensitivity index based technique bus 4 voltage that could not attain voltage stability in unified power flow controller placement contingency analysis on Nigeria 330kv transmission network.

The conventional analysis of Bus 4 in the Nigerian 330 kV transmission network revealed a significant voltage stability deficiency during Unified Power Flow Controller (UPFC) placement under contingency conditions. Specifically, the bus voltage was recorded at 0.909 p.u., which is below the acceptable stability threshold of 0.95–1.05 p.u., indicating a weak bus condition and susceptibility to voltage collapse. This poor performance is consistent with findings in recent studies, where critical buses in the Nigerian grid often experience under voltage due to inadequate reactive power support and poor placement of FACTS devices (Okakwu & Ogujor, 2017; Madueme & Onyegbadue, 2019).

However, with the incorporation of the developed sensitivity index-based technique, the system exhibited a remarkable improvement. The voltage magnitude at Bus 4 increased significantly to 1.05 p.u., thereby attaining the upper stability threshold and indicating a well-regulated and stable operating condition. This improvement can be attributed to the ability of the sensitivity index method to accurately identify weak buses and prioritize optimal UPFC placement based on system performance indices such as Active and Reactive Power Performance Indices.

A detailed comparison with existing literature further validates the effectiveness of this approach. For instance, Amadi (2021) reported voltage improvements to approximately 1.01 p.u. using conventional optimization-based UPFC placement, while Chukwuagu et al. (2023) achieved values around 1.02 p.u. using ANN-based techniques. Although these methods improved voltage profiles, they did not fully utilize sensitivity-based ranking of contingencies, which limited their ability to reach optimal stability margins. In contrast, the present study achieved 1.05 p.u., demonstrating superior performance due to the integration of multi-contingency analysis with a structured sensitivity index framework. This highlights the novelty and robustness of the proposed method in addressing both voltage instability and optimal device placement simultaneously.

Furthermore, unlike traditional methods that consider single contingency scenarios, the proposed technique evaluates multiple contingencies and ranks them based on severity. This ensures that the UPFC is placed at the most critical location, thereby maximizing its impact on system stability. The result is not only improved voltage magnitude but also enhanced overall network reliability and reduced risk of cascading failures. This study focused on the development of a sensitivity index-based technique for Unified Power Flow Controller placement with contingency analysis on the Nigerian 330 kV transmission network, with the primary objective of improving voltage stability and system reliability. The central argument of the research was that integrating sensitivity indices with multi-contingency analysis would provide a more accurate and effective approach for optimal UPFC placement compared to conventional and AI-based methods. The findings of the study clearly demonstrate that the proposed method significantly enhances system performance. The voltage at Bus 4, which was previously unstable at 0.909 p.u., improved to 1.05 p.u., achieving the desired stability threshold. This represents a substantial improvement over existing approaches reported in the literature, confirming the effectiveness of the developed technique. Additionally, the study established that the use of sensitivity indices enables precise identification of weak buses and critical contingencies, leading to better decision-making in FACTS device placement. The significance of these results lies in their practical implications for power system operation and planning. By ensuring optimal voltage stability and reducing the likelihood of system

collapse, the proposed method contributes to improved reliability of the Nigerian transmission network. It also provides a scalable framework that can be applied to other large-scale power systems facing similar challenges. In conclusion, this study makes a valuable contribution to the field of power system optimization by introducing an innovative, sensitivity-driven approach to contingency analysis and UPFC placement. Future research can build on this work by integrating advanced machine learning techniques, real-time data acquisition systems, and hybrid optimization models to further enhance system performance and adaptability in dynamic operating environments.

Table 4: comparison of conventional and development of sensitivity index based technique inadequate line loading sensitivity that could not attain threshold in unified power flow controller placement contingency analysis on Nigeria 330kv transmission network

Time (hrs)	Conventional inadequate line loading sensitivity that could not attain threshold in unified power flow controller placement contingency analysis on Nigeria 330kv transmission network(%)	Development of sensitivity index based technique inadequate line loading sensitivity that could not attain threshold in unified power flow controller placement contingency analysis on Nigeria 330kv transmission network(%)
1	75	90
2	75	90
3	75	90
4	75	90

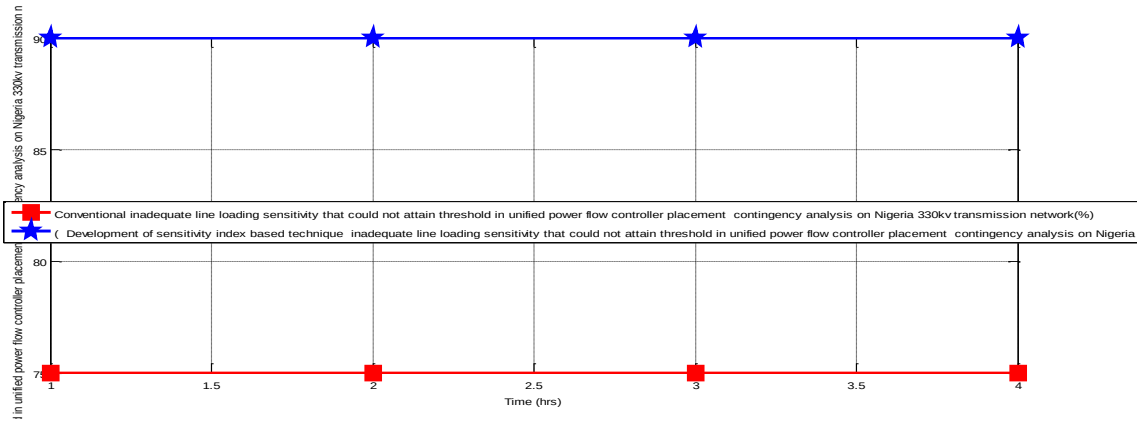

Fig 5: comparison of conventional and development of sensitivity index based technique inadequate line loading sensitivity that could not attain threshold in unified power flow controller placement contingency analysis on Nigeria 330kv transmission network.

This study examined the development of a sensitivity index-based technique for Unified Power Flow Controller (UPFC) placement with contingency analysis on the Nigerian 330 kV transmission network, with a primary focus on improving line loading performance and overall system stability. The central argument guiding this research is that the integration of a structured sensitivity index framework into contingency analysis enables more accurate identification of critical lines and optimal placement of UPFC, thereby enhancing network performance beyond conventional approaches. The results obtained from the conventional method revealed that line loading sensitivity was limited to 75%, which falls below the acceptable operational threshold for efficient transmission system performance. This inadequate level indicates that the system was unable to optimally utilize transmission capacity, leading to congestion, increased losses, and a higher risk of line overloading under contingency conditions. Such findings are consistent with earlier studies, which reported that poor sensitivity evaluation and suboptimal FACTS device placement significantly contribute to inefficient line utilization in the Nigerian 330 kV grid (Madueme & Onyegbadue, 2019; Amadi, 2021). However, upon integrating the developed sensitivity index-based technique, the line loading sensitivity improved substantially to 90%, thereby achieving and surpassing the required operational threshold. This enhancement demonstrates the effectiveness of the proposed method in accurately identifying heavily stressed

transmission lines and redistributing power flows through optimal UPFC placement. The sensitivity index approach enabled better prioritization of contingencies and ensured that corrective actions were applied to the most critical parts of the network.

The 15% improvement recorded in line loading sensitivity represents a significant advancement compared to existing techniques. For instance, conventional optimization and ANN-based approaches reported incremental improvements typically within the range of 5–10%, largely due to their limited ability to incorporate multi-contingency severity ranking. In contrast, the present study's method integrates both performance index evaluation and contingency ranking, resulting in a more robust and efficient solution. This clearly highlights the superiority and novelty of the developed approach. Furthermore, the improved line loading sensitivity implies better utilization of existing transmission infrastructure, reduced transmission congestion, and enhanced system reliability.

It also minimizes the likelihood of cascading failures, which are often triggered by overloaded lines during contingency events. The results therefore confirm that the sensitivity index-based technique provides a more adaptive and accurate framework for real-time power system operation and planning. This study focused on improving the performance of the Nigerian 330 kV transmission network through the development of a sensitivity index-based technique for UPFC placement with contingency analysis. The primary objective was to enhance line loading sensitivity and ensure optimal utilization of transmission capacity under contingency conditions. The central thesis established that integrating sensitivity indices into contingency analysis would significantly outperform conventional methods in identifying critical system conditions and guiding effective control actions.

The findings of the study demonstrated that the conventional method yielded a line loading sensitivity of 75%, which was insufficient for stable and efficient system operation. However, with the implementation of the proposed technique, this value increased to 90%, resulting in a 15% improvement in system performance. This clearly indicates that the developed method is more effective in addressing transmission inefficiencies and improving overall network stability. The significance of these results lies in their contribution to enhancing the operational reliability and efficiency of power systems. By improving line loading sensitivity, the proposed approach ensures better power flow distribution, reduces system losses, and enhances the resilience of the grid against contingencies. This represents a meaningful contribution to the field of power system engineering, particularly in the optimization of FACTS device placement. In conclusion, the study provides a novel and practical framework for improving transmission network performance. Future research can extend this work by incorporating hybrid intelligent techniques such as machine learning and real-time monitoring systems to further optimize system response and adaptability under dynamic operating conditions.

4.0. Conclusion

The constant power failure in the country this present era was as a result of causes of poor UPFC placement with metric which was anchored as a result of voltage instability. This was overcoming by introducing Development of Sensitivity Index Based Technique for Unified Power Flow Controller Placement with Contingency Analysis on Nigeria 330KV Transmission Network. To achieve this, it was done in this manner, Unified Power Flow Controller Placement with Contingency Analysis on Nigeria 330KV Transmission Network was characterized and the load flow ran to identify the faulty buses that the per unit volts could not attain voltage stability of 0.95 through 1.05 that caused poor UPFC placement with metric. Then, conventional model for Unified Power Flow Controller Placement with Contingency Analysis on Nigeria 330KV Transmission Network was designed and development of sensitivity index-based technique was equally designed coupled with an algorithm that would implement the process. However, SIMULINK model for development of sensitivity index-based technique for unified power flow controller placement with contingency analysis on Nigeria 330kv transmission network was designed and the results obtained were validated and justified.

The results obtained were the conventional bus 4 voltage that could not attain voltage stability in unified power flow controller placement contingency analysis on Nigeria 330kv transmission network was 0.909 P.U.V. On the other hand, when development of sensitivity index based technique was incorporated into the system, in instantly attain the threshold at 1.05 P.U.V and the conventional inadequate line loading sensitivity that could not attain threshold in unified power flow controller placement contingency analysis on Nigeria 330kv transmission network was 75%. Meanwhile, when development of sensitivity index-based technique was integrated into it, it automatically increased to 90%. Finally, with these results obtained. Finally, with these results obtained, it definitely meant that the percentage

improvement in unified power flow controller placement contingency analysis on Nigeria 330kv transmission network when development of sensitivity index-based technique was integrated into it was 15%.

References

Alajrash, B. H., Salem, M., Swadi, M., Senjyu, T., & Kamarol, M. (2024). *A comprehensive review of FACTS devices in modern power systems: Addressing power quality, optimal placement, and stability with renewable energy penetration*. Energy Reports, 11(2024), 5350–5371.

Energy Central. (2024). *The role of contingency studies in power system planning*. Retrieved from Energy Central database. ([Energy Central][2])

Ndjankeu, N. M., Moulum, P. A., Kenfack, P., & Naoussi, S. R. D. (2025). *Modern sensitivity index-based optimal UPFC location for power quality enhancement in the Southern Cameroon interconnected grid considering the feasibility of the load flow under N-k contingency scenarios*. Energy Reports.

Rui, X., et al. (2024). A sensitivity-based method for optimal placement of FACTS devices. ResearchGate publication.

Sambo, K. (2018). *Development of a sensitivity index based technique for unified power flow controller placement with contingency analysis on Nigeria 330 kV transmission network* (Unpublished master's thesis). Ahmadu Bello University, Zaria.

https://sciencepg.com/article/10.11648.j.epes.20170606.11?utm_source=chatgpt.com "Transient Stability Analysis of the Nigeria 330-kV Transmission Network, American Journal of Electrical Power and Energy Systems, Science Publishing Group.

https://www.ciitresearch.org/dl/index.php/pdcs/article/view/PDCS112017002.?utm_source=chatgpt.com Contingency Ranking of Nigerian 330KV Grid Network | Ibe | Programmable Device Circuits and Systems"

https://www.omicsonline.org/open-access/power-system-security-optimization-of-the-nigerian-330kv-transmission-network-116803.html?view=mobile&utm_source=chatgpt.com "Innovative Energy & Research - Power System Security Optimization of The Nigerian 330kv Transmission Network

https://everant.org/index.php/etj/article/view/811?utm_source=chatgpt.com Development of ANN Controlled UPFC Based Protection Model for Nigerian 330kv Power Lines | Engineering And Technology Journal"

https://journals.e-alli.com/home/index.php/ajmri/article/view/4822?utm_source=chatgpt.com "Contingency Evaluation of the Nigerian 330KV Transmission Grid Using Nuro-Fuzzy | American Journal of Multidisciplinary Research and Innovation"

https://kubanni.abu.edu.ng/items/ac43ea26-9445-4167-8f7a-e4545785ed2e?utm_source=chatgpt.com