UJEAS

UNIZIK JOURNAL OF ENGINEERING AND APPLIED SCIENCES

UNIZIK Journal of Engineering and Applied Sciences 6(1), March (2026), 3275-3289
Journal homepage: https://journals.unizik.edu.ng/index.php/ujeas
PRINT ISSN: 2992-4383 || ONLINE ISSN: 2992-4391

Contingency Investigation of Nnamdi Azikiwe University, Awka Hybrid Distribution System

Izuogu O. K[1], Anionovo U. E[2], Nworabude F. E[3], Okoli M. O[4], Anazia E. A[5]
[1]Emerging Markets Telecommunication Services Ltd
[2,3,5]Electrical Engineering Department, Nnamdi Azikiwe University, Awka.
[4]Electronics and Computer Engineering Department, Nnamdi Azikiwe University, Awka.
[2]Corresponding Author: ue.anionovo@unizik.edu.ng

Abstract
Electric power distribution systems are prone to disturbances such as voltage instability, line and ground faults, overloading, equipment aging, natural disasters, and human operational activities, all of which affect system stability and reliability. The distribution network of Nnamdi Azikiwe University (UNIZIK) faces similar challenges. This study presents a contingency analysis of the university's hybrid electric power distribution system to identify system vulnerabilities and propose measures to improve stability. The methodology involved load distribution surveys, analytical power system calculations, and modelling and simulation using the Electrical Transient Analysis Program (ETAP). Contingency assessments were performed under N-1 and N-2 outage scenarios to evaluate voltage performance, reactive power adequacy, and thermal loading of key system components. Results show that although the system has adequate generation capacity, weak distribution feeders limit its performance. Voltage violation severity indices reached 37%, while reactive power severity indices rose to 26,491.81 under critical contingencies. The DigLib–HostelM feeder also operated at 94% of its rated capacity. The study recommends reactive power compensation and feeder reinforcement to enhance system reliability.

Keywords: Contingency Analysis, Hybrid Distributed System, Hybrid Energy Generation, Power System.

1. Introduction

Electric power system had significantly grown in size and complexity, leading to several operational limitations challenges. The electric power reliability remains a significant challenge in Nigeria due to poor infrastructure redundancy, increasing load demand, and persistent grid instability, despite several advancement recorded in the power sector. Although Hybrid Energy Generation Systems (HEGS) have been introduced at some points in the network, particularly at the distribution level close to consumers, reliability issues still persist. By integrating renewable energy sources, conventional generation, and energy storage technologies, HEGS can provide a more stable power supply. Studies by Adaramola, Agelin-Chaab, and Paul (2015) and Misra and Sharma (2020) indicate that Renewable Energy Resources (RERs) contribute to steady power generation, while HEGS also help industries meet high energy demands while reducing carbon emissions (Jahangir et al., 2022).

Renewable Energy Resources (RERs) offer several benefits, including reduced carbon emissions, lower network losses, and decreased electricity generation costs. However, they also introduce technical challenges for secure network operation. These challenges arise mainly from bidirectional power flow, voltage rise effects at the point of connection, and the intermittent nature of renewable power generation (Baruah et al., 2015; Xinyu et al., 2019). Addressing these challenges requires the implementation of Active Network Management (ANM) strategies that actively monitor and control renewable generation and other network parameters using advanced communication and control systems.

Advances in contingency analysis techniques have also contributed to improving power system reliability. Traditional deterministic methods such as the N-1 security criterion remain fundamental in power system studies,

but modern approaches increasingly incorporate probabilistic and artificial intelligence–based techniques. In their investigation of machine learning and optimization algorithms for contingency identification and system restoration, Abdelaziz, Shafiullah, and Mekhilef (2020) reported improvements in prediction accuracy and response speed. These advanced techniques enable the analysis of large datasets and complex operational scenarios commonly associated with hybrid power systems. Pal, Qiu, and Wu (2018), while studying contingency management in hybrid microgrids, proposed adaptive protection strategies capable of adjusting to changing system configurations resulting from renewable energy integration. Their findings indicated that conventional protection schemes may be insufficient in hybrid power systems without intelligent control strategies. Similarly, Mohanta, Panigrahi, and Pradhan (2017) emphasized the complex nature of hybrid system operation by applying multi-objective optimization to develop backup strategies that balances reliability, operational cost, and environmental considerations.

However, many of these advanced operational strategies remain largely underdeveloped in the Nigerian power sector, including the distribution system at Nnamdi Azikiwe University (UNIZIK), Awka. The university operates a campus-wide 11 kV/415V hybrid distribution network that combines utility grid supply with Hybrid Energy Generation Systems (HEGS). This hybrid system comprises a large Solar Photovoltaic (PV) plant, a Battery Energy Storage System (BESS), and diesel generators. Although this configuration enhances supply availability, the system remains vulnerable to disturbances such as transformer outages, feeder failures, inverter trips, and generator loss. In the absence of proper stability control, these events may lead to voltage instability, frequency deviations, and inefficient energy utilization.

Contingency analysis is therefore an essential tool in power system operation, enabling the evaluation of system performance under hypothetical failure scenarios such as line outages, transformer faults, and generation loss. The increasing penetration of renewable energy sources in hybrid distribution networks further complicates system operation and necessitates more advanced contingency analysis approaches to maintain system stability and reliability. Earlier analytical methods such as the Gauss–Seidel, Newton–Raphson, and Fast Decoupled load flow techniques have been widely used to estimate system parameters before and after contingency events. However, these methods often require numerous iterative calculations, which can delay system response. Nevertheless, extensive research has been conducted on hybrid energy system integration, planning, expansion, protection coordination, and stability restoration. These advancements, supported by contingency analysis studies, have contributed to improved fault detection, mitigation strategies, and rapid system recovery following disturbances.

The authors of this article noted that, direct studies on the UNIZIK hybrid distribution system or similr installations in Nigeria, are limited. However, a few authors such as Nwokolo et al. (2021) analyzed load flow and contingency scenarios in a non localized Nigerian hybrid microgrid and recommended robust fault detection and isolation mechanisms to enhance system resilience. A similarly research by Nworabude, Atuchukwu, Ufoaroh, and Anionovo (2023) performed an ETAP-based simulation of the UNIZIK HEGS, focusing on voltage profile and megawatt generation with and without microgrid integration. However, their study did not include contingency analysis of the hybrid system, which is a critical analysis required to test the system reliability.

Notwithstanding the significant investment in distributed generation at UNIZIK Awka, several operational challenges persist, including the absence of documented contingency performance indices, the risk of transformer overloading during islanded operation, voltage drops at remote 415 V load zones, and limited redundancy on critical feeders. These issues highlight the need for a detailed simulation-based contingency assessment. Accordingly, the authors in research developed a detailed ETAP model of the UNIZIK 11 kV/415 V distribution network, performed base-case load flow analysis, simulated N-1 and N-2 contingency scenarios, evaluated voltage profile and loading conditions, as well as assessed system reliability indices, and proposed technical mitigation measures aimed at improving power system stability and reliability within the university campus.

2.0 Materials and methods

The method used in this research includes, literature review, network modelling using Electrical Transient Analyzer Program (ETAP), version 19.1, and simulation.

The UNIZIK distribution network operates at 11 kV / 415 V and integrates distributed generation (DG) in the form of solar photovoltaic (PV), battery energy storage systems (BESS), and diesel generators, consistent with modern hybrid distribution system architectures

2.1 Unizik Hybrid Distribution Network Modelling Assumptions

The distribution Network modelling assumptions are as follows:

- The network operates at a nominal voltage of 11 kV on the primary side and 415 V on the secondary side.
- Loads are modelled as constant P–Q loads based on measured or estimated campus demand profiles.
- The slack (reference) bus is located at the Point of Common Coupling (PCC) with the utility supply.
- Solar PV generation is modelled as a controlled PQ bus during steady-state analysis.
- Battery energy storage systems operate in either charging or discharging mode depending on the operating scenario.
- Diesel generators are modelled as PV buses with voltage regulation capability within permissible limits.

The loads are zoned as shown in the consumer voltage level distribution transformers shown in table 1.

Table 1: Consumer Load Distribution. (Adapted from Nworabude, Atuchukwu, Ufoaroh, and Anionovo, 2023)

S/NO	LOAD ZONES	TRANSFORMER RATINGS (kVA)	CONDUCTOR LENGTH (KM)	LOADS (kVA)
1	Bakassi	500	4.1	98
2	Architect building	300	0.2	35
3	Admin block	500	1.1	175
4	Unizik Press	100	0.85	21
5	Science village	500	1.7	121
6	Ifite gate	500	2.25	52
7	Agric	500	0.2	142
8	Foundry (Engineering)	500	0.7	140
9	Chike Okolie	300	0.45	45
10	Faculty of Art	500	0.4	102
11	Digital library	500	0.5	60
12	Men hostel	500	0.1	26
13	Management Science	500	0.3	96
14	Faculty of Law	500	0.4	101
15	Egboka	100	1.05	20
16	Female	500	1.35	20
17	GTB	200	0.5	42
18	Fidelity bank	100	0.45	45
19	Access bank	200	0.45	48
20	Heritage bank	100	0.4	36
21	UBA	200	0.35	41
22	First bank	200	0.45	40
23	Zenith bank	200	0.5	44
24	Auxiliary	160	-	50
	Total	**8,160**	**18.75**	**1600**

2.2 Unizik Hybrid Energy Generation System Modelling Parameters

The Distributed Generation System Configuration is as follows:

Solar PV System: The PV System configuration is as follows: Panels: 7,680 polycrystalline - Rating: 325 W per panel - Installed capacity: ≈ 2.50 MW - Strings: 384 (20 panels per string, that is 20 panels in series), Power per string = 6.5 kW

Voltage at maximum power (Vmp): 36 – 38 V, Current at maximum power (Imp): 8.5 – 9.1 A

Open-circuit voltage (Voc): 45 – 47 V, Short-circuit current (Isc): 9.0 – 9.6 A
Inverters: 34 string inverters (10–12 strings per inverter).
Battery Energy Storage System - Batteries: 1,440 × 2 V cells - Containers: 4 - Cells per container: 360 (series-connected), Battery capacity is equal to 1772 AH, per container.
System Voltage = 360 * 2 V = 720V
Diesel Generators - 700 kVA × 2 units - 400 kVA × 2 units - Total Diesel Generator capacity: **2,200 kVA**
Transformers Installed: Table 2 shows the installed transformers and their functions
Low Voltage / High Voltage (LV/HV) = **0.415 / 11 kV**, Power factor (grid-tied PV) ≈ **0.98–1.00**

Table 2: Installed transformer and their functions

Rating (kVA)	Quantity	Function
1250	2	Step-up
1100	2	Step-up
800	2	Step-up
160	1	Step-down (11 kV/415 V)

Totalizing Panels: 2 (each serving two generators)

2.3 Modelling Calculations
The real Power Capability of Each Transformer, are as calculated below
Transformer apparent power:

$$S = 1.25 \text{ MVA}$$

At **unity PF** (typical for PV inverters):

$$P_{max} \approx 1.25 \text{ MW}$$

At **PF = 0.98**:

$$P_{max} = 1.25 \times 0.98 = \mathbf{1.225\ MW}$$

Hence, each transformer can safely carry ≈**1.22–1.25 MW of PV power**.
Correct PV Split per Transformer
Given total PV power: $= 2.496$ MWp
When split equally, it becomes: $= 2.496 \div 2 = \mathbf{1.248\ MWp\ per\ transformer}$

Transformer loading capacity is obtained rom the calculation below**:**

$$\frac{1.248}{1.25} \times 100 \approx \mathbf{99.8}\%$$

This value is **acceptable but very tight** it is suitable for academic work and real systems if Unity PF operation is enforced and adequate ventilation is provided

String-Based Allocation
The solar panels are allocated in strings as follows, given the total panel strings.
Strings per transformer

$$384 \div 2 = \mathbf{192\ strings}$$

Panels per transformer

$$192 \times 20 = \mathbf{3,840\ panels}$$

Power per transformer

$$192 \times 6.5 = \mathbf{1.248\ MWp}$$

Inverter Allocation per Transformer
Total inverters installed = **34 × 75 kW**

Note: Since 34 inverter strings were installed, each inverter should be rated 75 kW such that 34 times 75 will equal the 2.5 MW or 2550 kW installed capacity.

For the purpose of our model in ETAP, we **Split evenly,** the 34 inverters as follows 17 inverters per transformer.

AC power per transformer: $17 \times 75 = \mathbf{1.275}\ MW_{AC}$

The inverter is slightly oversized relative to transformer as shown below:

$$\frac{1.275}{1.25} = 1.02$$

But it is acceptable because, PV rarely produces full rated power, Temperature derating reduces peak output, and minor clipping are handled at inverter level

Power Factor & Reactive Power Constraint

To **protect the 1.25 MVA limit**, Inverter PF ≥ **0.99 must be** enforced by limiting reactive power export in ETAP to Q_{max} = ±0.2 pu

This ensured:

$$\sqrt{P^2 + Q^2} \leq 1.25 \text{ MVA}$$

2.4 Etap Implementation Hints

For each PV subsystem, since we designed for two, PV array rating ≈ **1.25 MW**, the number of strings will be = **192**, and Modules in series = **20**, For the **Transformer, the r**ating is equal to **1.25 MVA**, percentage impedance (%Z) equals a typical value of **6–8%**. The cooling is set to Oil Natural-Air Natural (ONAN), option.

In summary, **"The 2.496 MWp PV plant** was divided into two identical subsystems, each supplying approximately 1.248 MWp through 17 string inverters to a dedicated 1.25 MVA, 0.415/11 kV step-up transformer. Operating the inverters at near-unity power factor ensured that transformer loading remained within its apparent power limit."

2.5 Etap Software Modeling Procedure

The Unizik HBDS modelling and simulation procedure is depicted in the step below and the flow diagram of figure 1.

- ✓ Create 11 kV main bus from the grid or utility
- ✓ Model 415 V load buses per load zone
- ✓ Model PV as inverter-based generation
- ✓ Model BESS with State of Charge (SOC) limits (20–90%)
- ✓ Model generators with frequency droop control
- ✓ Perform base case load flow analysis.
- ✓ Perform N-k or N-1 contingency case simulation
- ✓ Analyze results
- ✓ Investigate other contingency cases
- ✓ Draw conclusion and make recommendation.

2.6 Single-Line Diagram Description

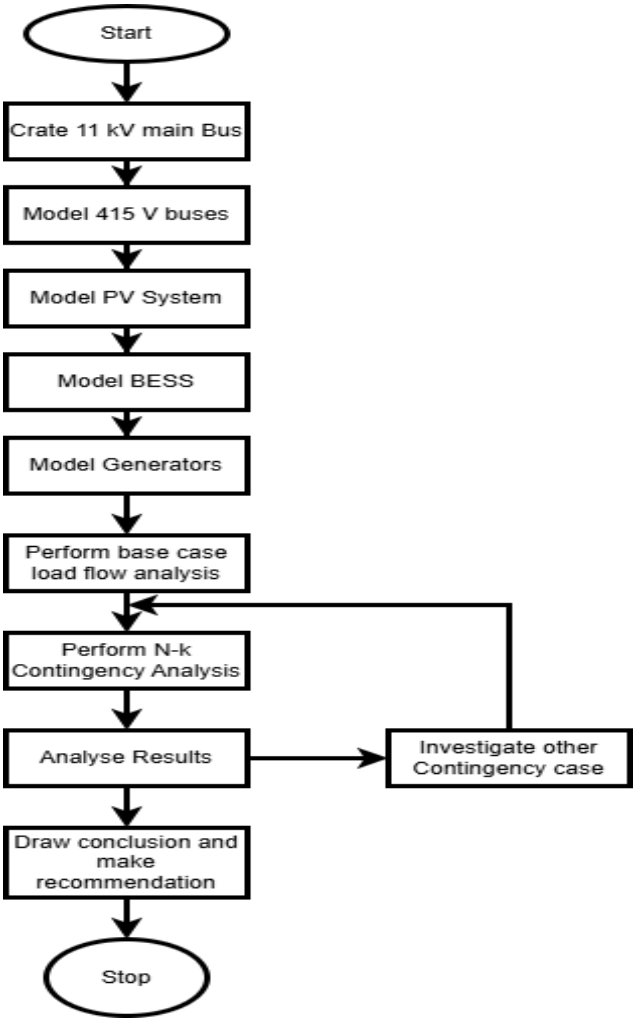

Figure 1: Modelling flowchart.

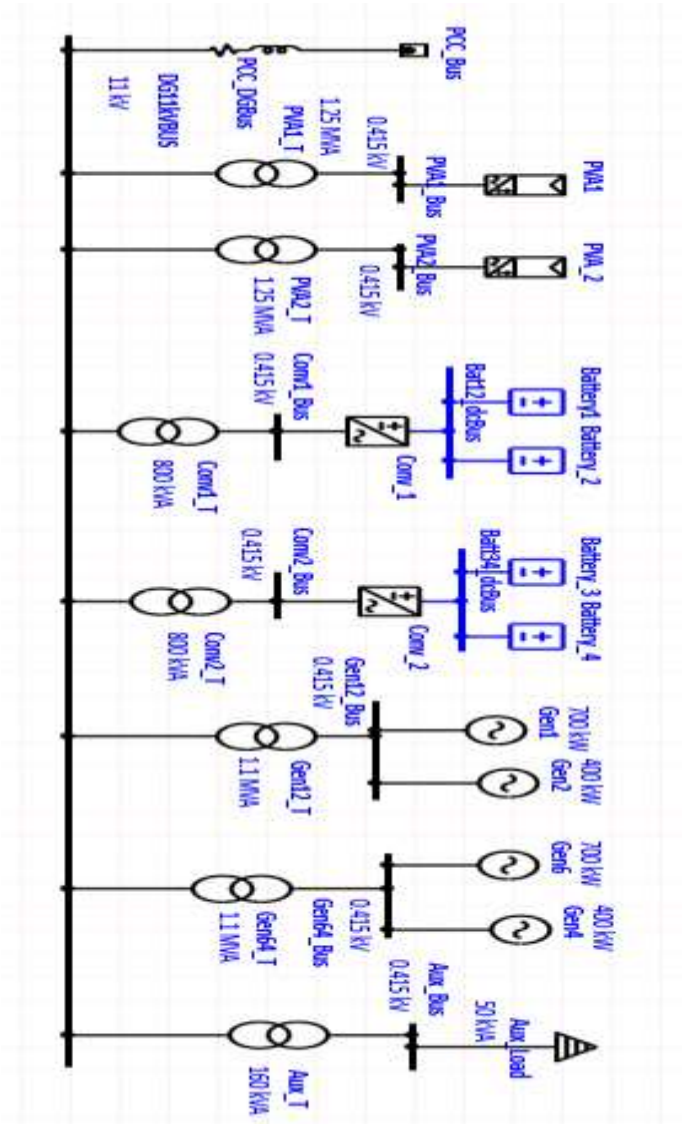

Figure 2: Single-Line Diagram of Unizik Hybrid Energy Generation System (UHEGS)

The result of the design calculations was implemented in ETAP environment to produce figure 2

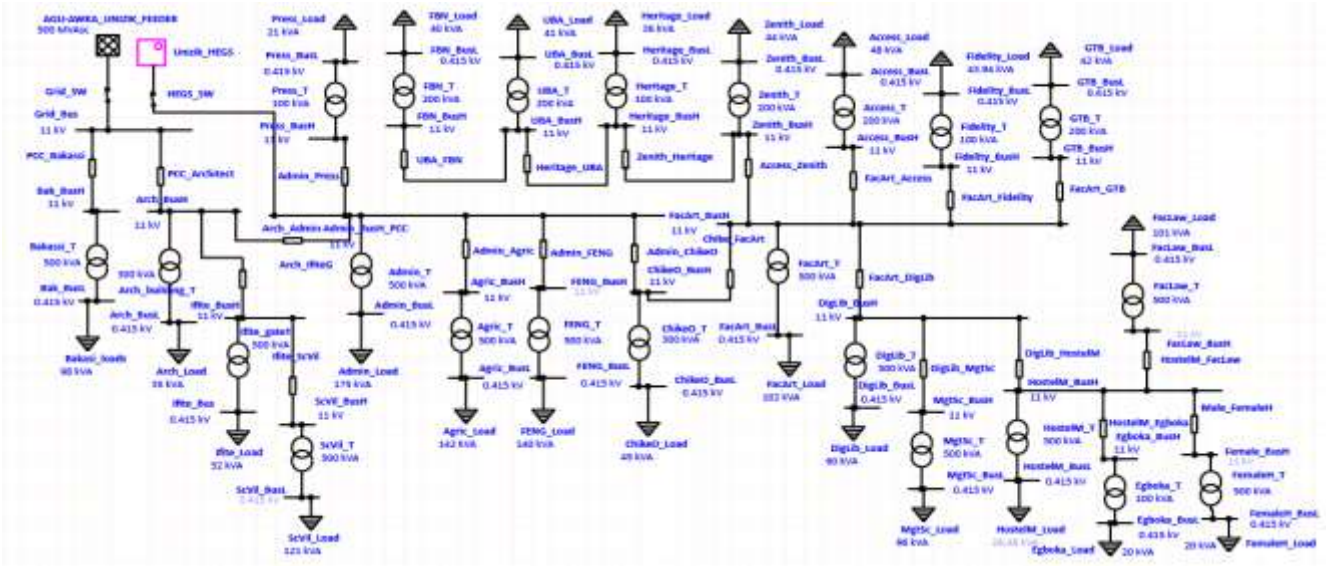

Figure 3: Complete Single-Line Diagram of Unizik Hybrid Distribution System.

Utility grid supplies the 11 kV main bus. Diesel generators are connected through totalizing panels. The solar PV plant is connected via step-up transformers to the 11 kV bus, with BESS at the point of common coupling. Multiple 11/0.415 kV transformers supply zonal load buses.

2.7 Reliability and performance indices formulation

This section presents the reliability and performance indices employed to evaluate the distribution network under study. The indices were selected based on internationally accepted standards and established power system reliability literature.

2.7.1 System Average Interruption Frequency Index (SAIFI)

SAIFI measures the average number of sustained interruptions experienced by a consumer over a specified period, typically one year. It reflects how often power supply interruptions occur within the network (IEEE Standard 1366-2012).

Mathematically, SAIFI is expressed as:

SAIFI = (Total number of customer interruptions) / (Total number of customers served)

$$\therefore SAIFI = \frac{(\sum \lambda_i N_i)}{N_t} \quad (1)$$

where:

λ_i = failure rate of component *i* (interruptions/year)

N_i = number of customers affected by interruption of component *i*

N□ = total number of customers served

For the UNIZIK Awka distribution network, SAIFI evaluates how frequently load zones such as academic buildings, hostels, medical facilities, and ICT centers experience interruptions due to contingencies such as feeder outages, transformer failures, or generator trips. The availability of distributed generation and BESS is expected to significantly reduce SAIFI.

2.7.2 System Average Interruption Duration Index (SAIDI)

SAIDI represents the average total duration of power interruptions experienced by a consumer over a given period. It indicates how long interruptions last when they occur (IEEE Standard 1366-2012; Billinton, and Allan 1996).

SAIDI is given by:

$$SAIDI = \frac{(\sum U_i N_i)}{N_t} \quad (2)$$

where:
U_i = annual outage duration associated with component *i* (hours/year)
N_i = number of customers affected
N□ = total number of customers served
In the UNIZIK hybrid distribution network, SAIDI reflects the effectiveness of rapid islanding, backup generation, battery energy storage, and operational switching in reducing outage duration, particularly for critical load zones.

2.7.3 Energy Not Supplied (ENS)
Energy Not Supplied (ENS) quantifies the total electrical energy that is not delivered to consumers due to supply interruptions. It provides an economic and operational measure of outage impact (Billinton, and Allan 1996; Billinton and Li 1994).

ENS is calculated as:

$$ENS = \frac{(\sum P_i \times U_i)}{N_t} \tag{3}$$

where:
P_i = average load interrupted during contingency *i* (kW or MW)
U_i = duration of interruption (hours)

For UNIZIK Awka, ENS is evaluated per load zone under simulated contingencies. The hybrid configuration is expected to significantly reduce ENS through prioritized supply to critical loads and effective load shedding schemes.

2.7.4 Active Power Performance Index (APPI)
The Active Power Performance Index (APPI) is a contingency-based performance index used to assess the severity of active power imbalance in a power system following component outages. Unlike SAIFI and SAIDI, which are customer-oriented, APPI is a **system-oriented index** that evaluates how well the network satisfies active power demand during contingencies (Anders 1990; Fink and Carlsen 1978).
The APPI is defined as:

$$APPI = \frac{\sum|\Delta P_i|}{P_t} \tag{4}$$

where:

- ΔP_i = active power mismatch at bus *i* during contingency (MW)
- P□ = total system active power demand under base-case conditions (MW)

Alternatively, APPI may be expressed as a weighted index:

$$APPI = \sum w_i \left|P_{i,base} - \right|P_{i,contingency} \tag{5}$$

where:
P_i base = active power supplied at bus *i* in the base case
P_i contingency = active power supplied at bus *i* during contingency
w_i = weighting factor reflecting load priority

A higher APPI value indicates a more severe contingency, as it reflects greater deviation from normal active power supply conditions.
For the UNIZIK Awka hybrid distribution network, APPI is particularly useful in:

- ✓ Identifying the most severe contingencies Ranking transformer, feeder, and generator outages
- ✓ Evaluating the effectiveness of BESS and diesel generators in compensating active power deficits

2.7.5 Implementation of APPI in ETAP Software

In ETAP Software, APPI was evaluated by:

- ✓ Recording active power supplied to each load bus under base-case conditions
- ✓ Simulating N−1 contingencies
- ✓ Computing active power deviations at each bus
- ✓ Applying weighting factors to critical load zones
- ✓ Ranking contingencies based on APPI magnitude

The APPI results complement traditional reliability indices and are used in Chapter Four to identify the most critical components within the UNIZIK Awka hybrid distribution network.

1. Results

3.1 Steady State Load Flow Results

Load flow result of the Unizik HEDS is presented in this section. Table 3, shows the general configuration of the distribution system, with summary of the Megawatt-Megavar generation and loading of the system

Table 3: Distribution system configuration

Study Case ID	**BASE_CASE_LF**
Data Revision	Base
Configuration	Normal
Loading Cat	Design
Generation Cat	Design
Buses	55
Branches	54
Generators	4
Power Grids	1
Loads	24
Load-MW	1.094
Load-Mvar	0.277
Generation-MW	1.208
Generation-Mvar	0.385
Loss-MW	0.115
Loss-Mvar	0.108
Mismatch-MW	0
Mismatch-Mvar	0

Figure 4, shows the hybrid distribution system when the steady state load flow analysis was performed. The Grid and the HEGS was in operation when this simulation was performed. Male, female and faculty of law areas are seen to have voltages below the 0.95 p. u or 95% lower bond, hence why they are flagged by the ETAP load flow solver with red color bus bars. The rest of the bus that are black in color indicates normal operations, hence there are no voltage violations at that bus.

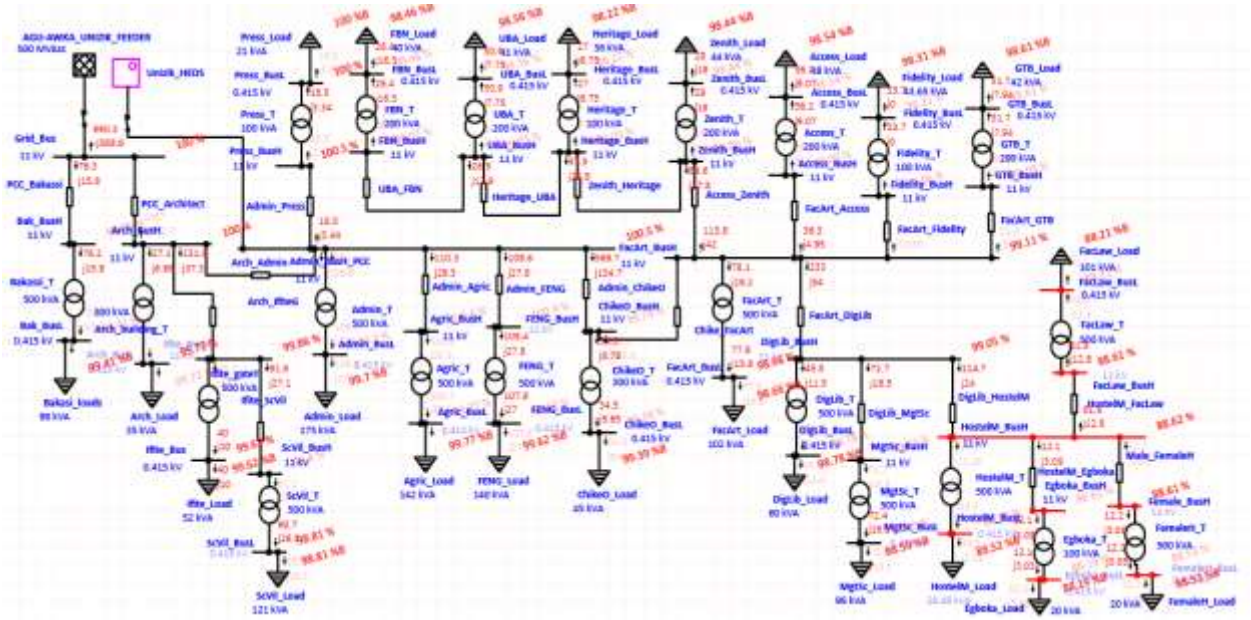

Figure 4: Steady State Load Flow Analysis diagram with Grid and Unizik Hybrid Energy Generation System in service

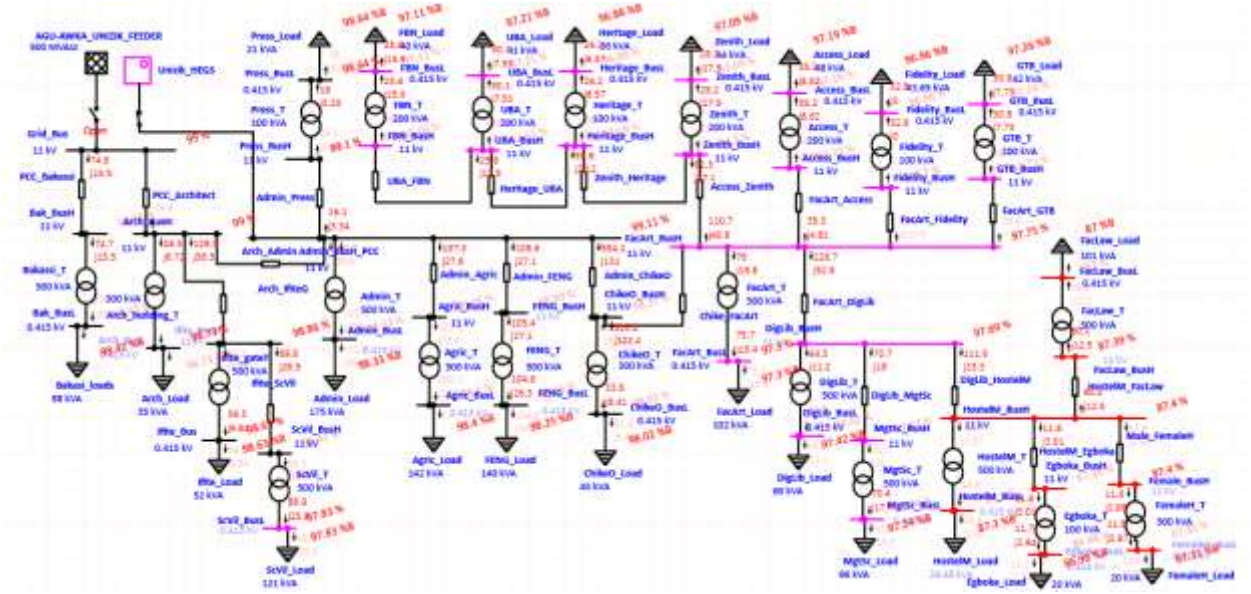

Figure 5: Steady State Load Flow Analysis diagram with only Unizik Hybrid Energy Generation System in service.

Figure 5 shows the same system but with grid out of service, as indicated with the open switch near the grid bus. It can be observed that the same region affected by low voltage profile when the grid was in operation, was also affected in this case.

Additional areas such as the bank street and the digital library zone can be seen to be operating at marginal values. That is all bus with purple color. This is an indication that the system is a bit more unstable when operating in islanded mode.

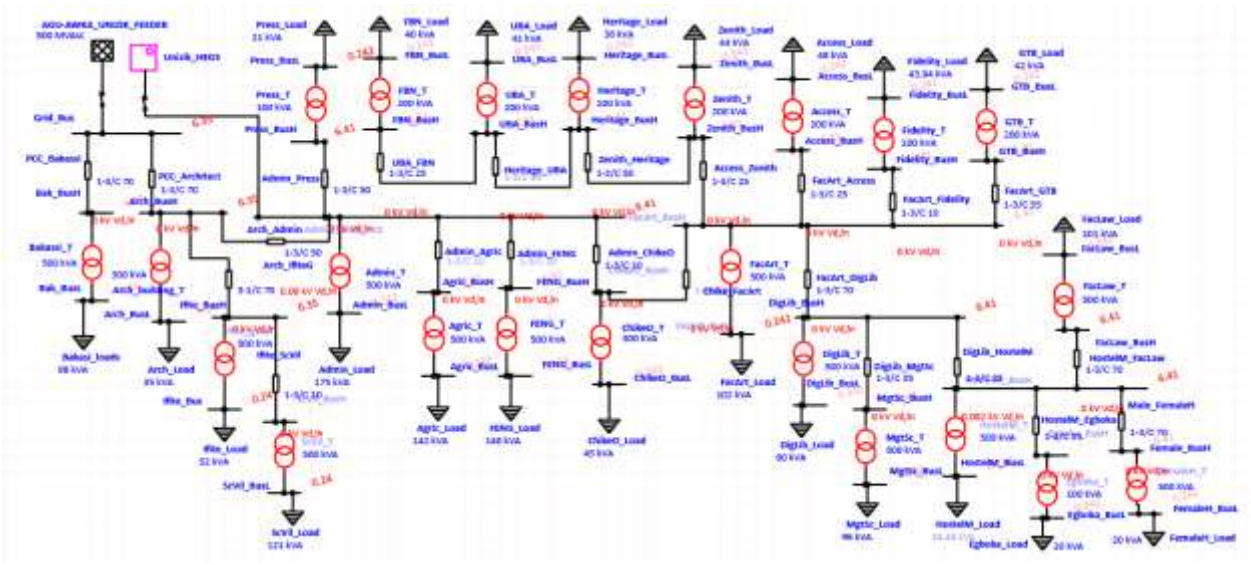

Figure 6: Contingency Analysis diagram with grid in service

Figure 6 and 7 show the state of the distribution system during contingencies. As with steady state load flow, the network showed more signs of instability when operating in islanded mode than when the grid is connected.
Detailed explanation of the contingency scenarios is given in section 3.2 over leave.

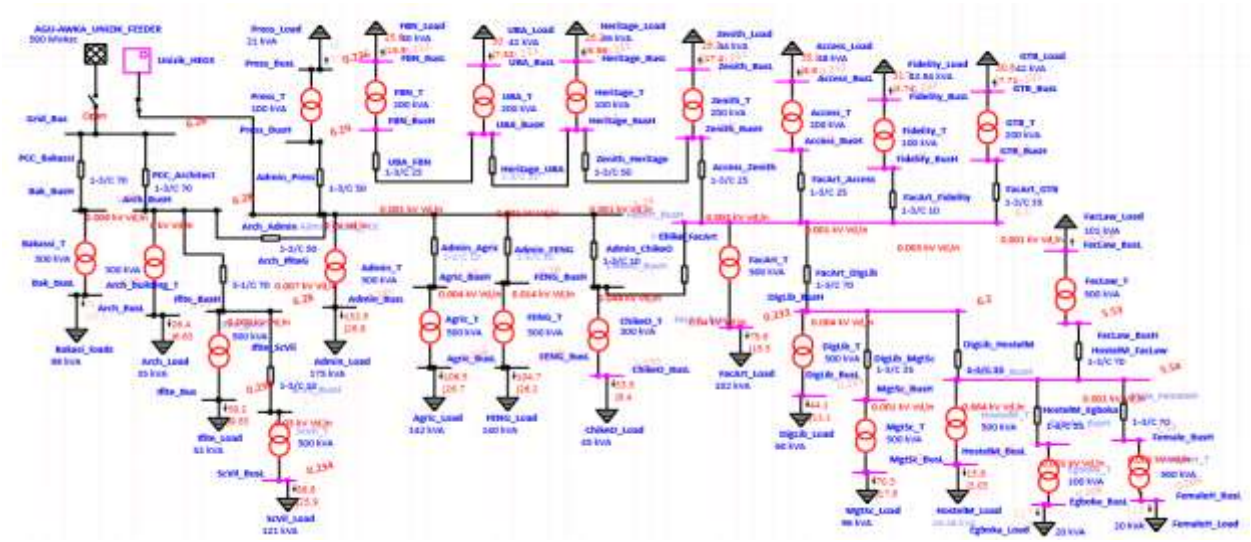

Figure 7: Contingency Analysis diagram with grid out of service

3.2 Contingency Analysis Overview

This section presents the results of the contingency analysis carried out on the studied power network using ETAP. Both single (N-1) and double (N-2) contingency scenarios were evaluated to assess the system's steady-state security, voltage performance, reactive power adequacy, and thermal loading of critical equipment. The analysis focused on buses, cables, synchronous generators, and photovoltaic (PV) arrays.

The ETAP contingency module was configured to simulate the outage of individual system components (N-1) and simultaneous outage of two components (N-2). For each contingency case, ETAP computed severity indices including: - Voltage Violation Severity (VVsp) - Active Power Change (ΔP) - Reactive Power Change (ΔQ) - Steady-State Severity (SSsp) - Worst-case Combined Severity Index. Before proceeding with the result analysis, let us briefly examine the meaning of each stability index.

VVsp (Voltage Violation Severity %)
Voltage limits violation is interpreted using this range.

- **< 10%** → Acceptable
- **10–30%** → Moderate concern
- **> 30%** → Severe voltage problem

Δ*P* Delta P (MW)
Change in active power flow due to contingency is evaluated using this matrix

- **0** → No significant power redistribution
- **Large values** → Network heavily stressed

Δ*Q* Delta Q (MVAr)
Change in reactive power due to contingency are evaluated using this matrix

- Large **Δ*Q*** = voltage instability risk
- Huge values = **reactive collapse / limit violation**

SSsp (Steady-State Severity %)
Thermal / steady-state equipment stress due to contingency is evaluated using this matrix.

- **< 50%** → Safe
- **50–80%** → Warning
- **> 80%** → Overload risk
- **> 100%** → Equipment damage likely

N-1 contingencies (single outage rows): These are rows where Outage 2 = 0.
Most severe N-1 outage can be found in Row 4 which corresponds to DigLib_HostelM (Cable). The combined severity index for this cable is equal to 26,430.57, ΔP = 3,858.31, ΔQ = 22,472.17 and VVsp = 6.48. This clearly indicate the weakest single element in the network, with massive reactive power stress, with Voltage collapse risk which is VAR-driven, not P-driven, because it is a long feeder, contains heavy inductive load with poor local reactive support. Technically speaking loss of DigLib_HostelM cable severely destabilizes the campus voltage profile.

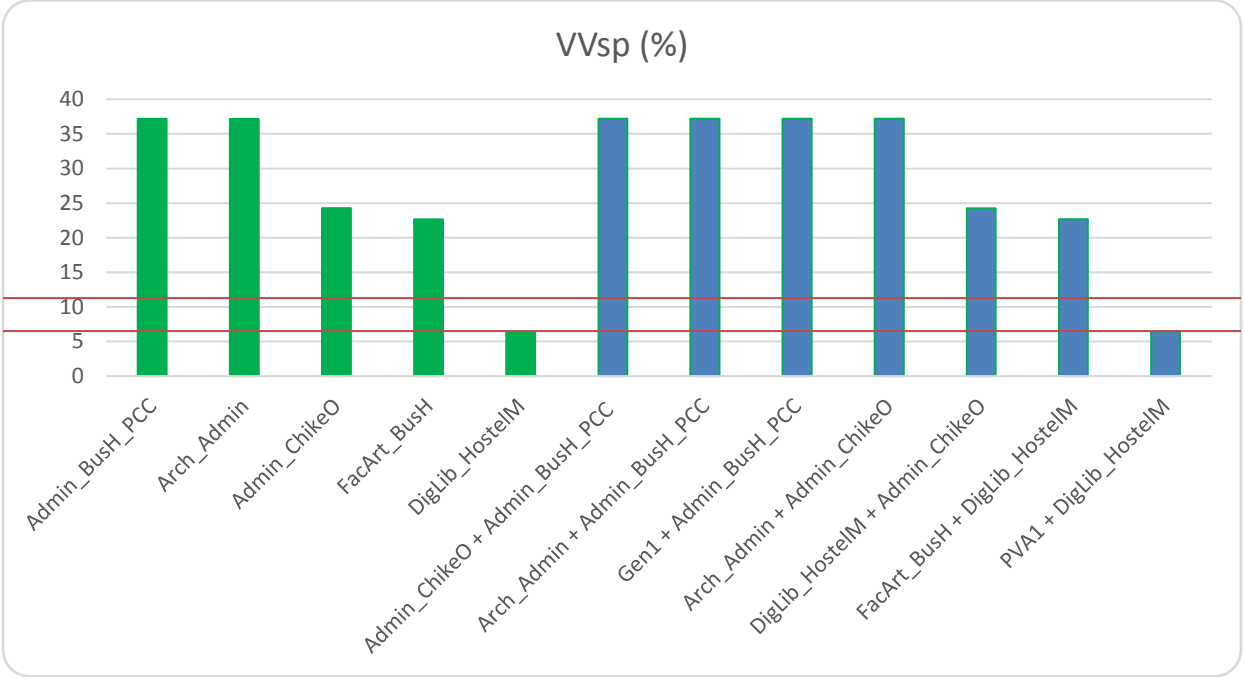

Figure 8: Voltage Violation Severity Index for Selected N-1 and N-2 Contingencies

Figure 8 compares voltage violation severity under critical N-1 and N-2 contingencies, highlighting that voltage stress is more pronounced for feeder outages than generation outages.

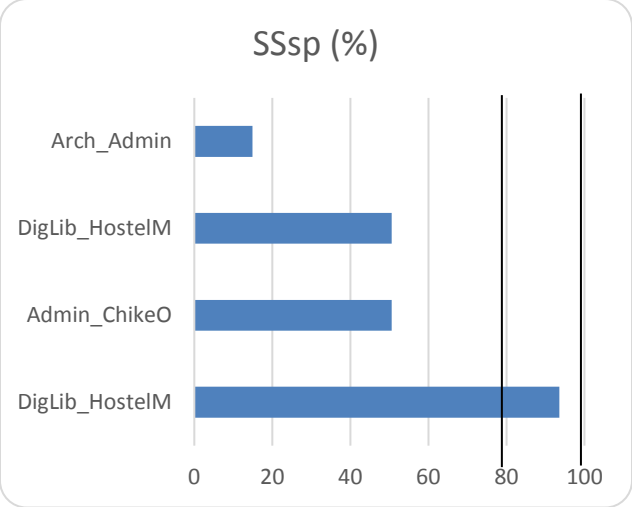

Figure 9: Thermal Loading Distribution of Critical Feeders under Worst-Case Contingencies

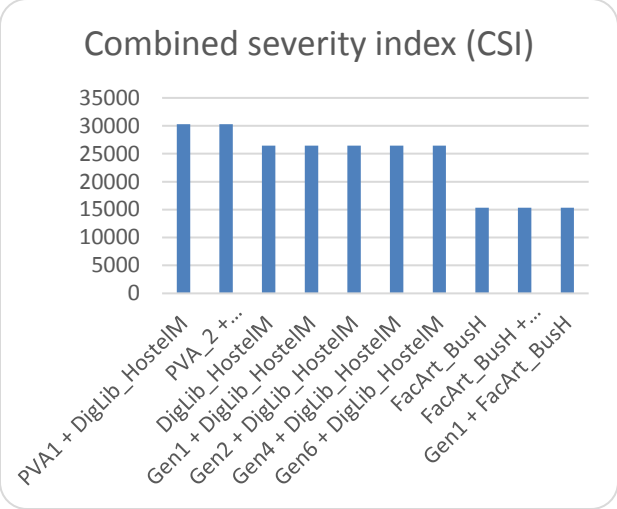

Figure 10: Ranking of Contingencies Based on Combined Severity Index

Figure 9 shows that the DigLib_HostelM feeder operates close to its thermal limit under contingency conditions, indicating a high risk of conductor overheating.

Figure 10 ranks contingencies according to their combined severity index, showing that cable-related outages dominate system risk.

4. Discussion

4.1 N-1 Contingency Results (Single Outage)

Bus Outages

The outage of the Admin_BusH_PCC bus resulted in a voltage violation severity of approximately 37%, while thermal loading remained low (SSsp ≈ 14.8%). This indicates that although the system experiences notable voltage stress, it remains thermally secure under this contingency.

Cable Outages

Cable outages produced the most severe impacts on system performance. In particular: - The Admin_ChikeO cable outage caused a significant reactive power violation, with ΔQ values as high as 11843.03 and a corresponding surge in the combined severity index. The DigLib_HostelM cable exhibited near-thermal overload conditions, with SSsp values approaching 94%, indicating operation close to conductor thermal limits.

These results demonstrate that the network failed the N-1 security criterion for selected critical feeders.

Generator and PV Array Outages

Outages of synchronous generators and PV arrays resulted in minimal changes to voltage and power flow indices. ΔP and ΔQ values were close to zero, and SSsp remained below 15%, confirming that generation adequacy is not the limiting factor in the network.

4.2 N-2 Contingency Results (Double Outage)

N-2 contingencies involving combinations of cable outages and generation or bus outages were found to be particularly severe. Cases involving DigLib_HostelM or Admin_ChikeO

cables combined with generator or PV outages resulted in both voltage instability and excessive thermal loading. Combined severity indices reached extremely high values, indicating non-survivable operating conditions without corrective measures.

4.3 Reactive Power and Voltage Issues

The extremely large ΔQ values observed in several contingencies indicate that reactive power limits were reached, leading to voltage instability. This highlighted inadequate reactive power support in the vicinity of critical feeders. The results suggest that voltage stability, rather than active power balance, is the dominant constraint in the studied network.

4.4 Ranking of Contingencies by Severity

Tier 1 – Critical (System Collapse Risk)

- Admin_ChikeO cable (N-1 and N-2 cases)
- FacArt_BusH bus combined with cable outages

Tier 2 – Severe (Operationally Unsafe)

- DigLib_HostelM cable combined with generator or PV outages

Tier 3 – Acceptable (N-1 Secure)

- Generator-only and PV-only outages

4.5 Corrective Measures and Mitigation Strategies

Based on the contingency analysis results, the following corrective actions are recommended:

1. Installation of shunt capacitor banks or STATCOM devices near Admin_ChikeO and DigLib_HostelM feeders.
2. Feeder reinforcement through cable upgrading or installation of parallel feeders.
3. Enhancement of reactive power control capabilities of synchronous generators and PV inverters.
4. Implementation of corrective switching schemes within ETAP to automatically relieve overloads during contingencies.

Implications for Network Planning and Operation

The findings indicated that the system is generation-adequate but network-constrained. Without targeted infrastructure upgrades and reactive power compensation, the network remains vulnerable to both N-1 and N-2 contingencies.

5. Conclusion

This study evaluated the steady-state security of the Nnamdi Azikiwe Hybrid Energy Distribution network using contingency analysis. The analysis showed that while generation resources are sufficient, the network is constrained by weak feeders and inadequate reactive power support.

The network fails the N-1 security criterion for critical cable outages such as Admin_ChikeO and DigLib_HostelM. Reactive power inadequacy is the dominant cause of voltage instability, rather than active power imbalance.

The authors thus recommended the following to mitigate the problems:

1. Install shunt capacitor banks or STATCOM devices near weak buses.
2. Upgrade or parallel overloaded feeders.
3. Enable coordinated reactive power control from generators and PV inverters.
4. Implement corrective switching schemes within ETAP.

5.1 Further Studies

Future studies should incorporate dynamic stability analysis, protection coordination, and probabilistic contingency assessment.

Refences

Abdelaziz, A. Y., Shafiullah, G. M., and Mekhilef, S. (2020). A review on the application of artificial intelligence techniques for contingency analysis and restoration in power systems. *Electric Power Systems Research, 185*, 106334. https://doi.org/10.1016/j.epsr.2020.106334

Adaramola, M.S.; Agelin-Chaab, M.; Paul, S.S. (2015), Analysis of hybrid energy systems for application in southern Ghana. Energy Convers. Manag., 88, 284–295.

Anders G. J., (1990), *Probability Concepts in Electric Power Systems*, New York: Wiley.

Baruah, P.J.; Eyre, N.; Qadrdan, M.; Chaudry, M.; Blainey, S.; Hall, J.W.; Jenkins, N.; Tran, M. (2015), Energy system impacts from heat and transport electrification. Proc. Inst. Civ. Eng. Energy, 167, 139–151.

Billinton R. and Li W., (1994), *Reliability Assessment of Electric Power Systems Using Monte Carlo Methods*, New York: Plenum Press.

Billinton, R., & Allan, R. N. (1996). *Reliability evaluation of power systems* (2nd ed.). Plenum Press.

Fink L. H. and Carlsen K., (1978), "Operating under stress and strain," *IEEE Spectrum*, vol. 15, no. 3, pp.

IEEE Power and Energy Society (2012), *IEEE Standard 1366-2012: IEEE Guide for Electric Power Distribution Reliability Indices*, New York: IEEE.

Jahangir, M.H.; Montazeri, M.; Mousavi, S.A.; Kargarzadeh, A. (2022), Reducing carbon emissions of industrial large livestock farms using hybrid renewable energy systems. Renew. Energy, 189, 52–65.

Keulenaer, H De (2008), "The Smart Grid – An Introduction", Available at: https://www.scribd.com/document/7541029/The-Smart-Grid-An-Introduction

Misra, A.; Sharma, M.P. (2020), Development of hybrid energy system for a remote area in Kutch District of Gujarat state, India. Energy Sources Part Recover. Util. Environ. Eff., 47, 2128–2150

Mohanta, D. K., Panigrahi, B. K., and Pradhan, S. K. (2017). Multi-objective planning of hybrid renewable energy system with contingency and reliability constraints. *Renewable Energy, 103*, 1-12.

Nwokolo, C. N., Eze, E. C., & Anigbogu, T. U. (2021). Load flow and contingency analysis of a hybrid microgrid: A case study in Nigeria. *Energy Reports, 7*, 2076-2085. https://doi.org/10.1016/j.egyr.2021.04.045

Nworabude, Ekene Franklin*, Atuchukwu, A. J, Ufoaroh, Stephen Uche, and Anionovo Ugochukwu Edebeani (2023), Integrating 2MW Distributed Generation (DG) on 11KV Distribution Network of Nnamdi Azikiwe University. Journal of Communication Engineering and Its Innovation Volume-9, Issue-3, www.matjournals.com

Pal, B. C., Qiu, F., and Wu, J. (2018). Adaptive protection for hybrid AC/DC microgrids with renewable energy penetration. *IEEE Transactions on Smart Grid, 9*(3), 2051-2060. https://doi.org/10.1109/TSG.2016.2622742

Xinyu, C.; McElroy, M.B.; Qiuwei, W.U.; Yinbiao, S.H.U.; Yusheng, X.U.E (2019), Transition towards higher penetration of renewables: An overview of interlinked technical, environmental and socio-economic challenges. J. Mod. Power Syst. Clean Energy, 7, 1–8.