UJEAS

UNIZIK JOURNAL OF ENGINEERING AND APPLIED SCIENCES

UNIZIK Journal of Engineering and Applied Sciences 6(3), September (2026), 3807-3816
Journal homepage: https://journals.unizik.edu.ng/index.php/ujeas
PRINT ISSN: 2992-4383 || ONLINE ISSN: 2992-4391

Computer-Aided Structural Evaluation of a Cassava Processing Machine Component Under Static Loading Conditions

Ejiroghene Kelly Orhorhoro[1*], Oghenekevwe Oghoghorie[2]
[1]Department of Mechanical Engineering, College of Engineering, Igbinedion University, Okada, Edo State, Nigeria

[2]Department of Mechanical Engineering, Faculty of Engineering, Benson Idahosa University, Benin City, Edo State, Nigeria

Corresponding Author's E-mail: ejiroghene.orhorhoro@iuokada.edu.ng

Abstract
This study presents a computer-aided structural evaluation of a cassava grinding chamber using SolidWorks SimulationXpress. The aim was to examine the structural behaviour of the grinding chamber before fabrication through finite element analysis (FEA). A three-dimensional model of the grinding chamber was developed in SolidWorks and assigned the material properties of plain carbon steel because of its strength, durability, and suitability for agricultural machines. A static structural analysis was carried out to determine the stress distribution, displacement, deformation, and factors of safety under the applied loading condition. The results showed that the grinding chamber remained within the elastic range of the material and exhibited good structural stiffness with very small deformation. The study demonstrates that finite element analysis is an effective tool for evaluating the structural performance of agricultural machine components during the design stage. However, since the grinding chamber operates under impact, vibration, and repeated loading during service, the present analysis is limited to static loading conditions. Future studies should include dynamic and fatigue analyses to provide a more comprehensive assessment of the component's long-term performance under actual operating conditions.

Keywords: SolidWorks Simulation Xpress, Finite Element Analysis (FEA), Cassava Processing Machine, Structural Analysis, von Mises Stress, Factor of Safety.

1. Introduction

The requirement for robust, dependable, and reasonably priced machine parts that can sustain operating loading circumstances has increased due to the growing need for effective agricultural processing systems. Agricultural processing machinery, like cassava processing equipment, is essential for increasing food production, decreasing post-harvest losses, and boosting economic productivity in many developing nations, like Nigeria. However, the mechanical dependability and structural integrity of these machines' constituent parts are crucial to their longevity and performance (Oborakpororo *et al.*, 2024; Akinfiresoye *et al.*, 2025; Aliyu *et al.*, 2025). During operation, cassava processing machines are constantly exposed to many types of mechanical loading, such as pressure, impact, torsion, vibration, and compressive pressures (Arora *et al.*, 2024; Oborakpororo *et al.*, 2024; Arowolo & Fashina, 2025). If the machine components are not appropriately constructed, these loading conditions could lead to material yielding, fatigue failure, stress concentration, or structural deformation (Babalola & Adebayo, 2024; Bello *et al.*, 2024; Bako *et al.*, 2025). Therefore, in order to guarantee safety, durability, operational effectiveness, and cost-effectiveness, adequate engineering study and structural evaluation of machine components prior to manufacturing are crucial. In the past, the creation of prototypes and experimental testing were crucial to the design and assessment of engineering components. Even though experimental approaches offer accurate performance evaluation, they are frequently linked to expensive materials, longer development times, and high labor costs.

By enabling virtual simulation and structural analysis of components prior to manufacturing, advances in computer-aided engineering (CAE) and finite element analysis (FEA) have drastically changed modern engineering design (Adetan *et al.*, 2024; Alabi & Ogunlade, 2024; Ojo & Alamu, 2024; Olalekan & Adewale, 2025; Eze & Nwankwo, 2025; Udeh & Eze, 2025). Engineers can forecast stress distribution, displacement behaviour, deformation features, and potential failure locations under certain loading conditions using finite element analysis (Chen *et al.*, 2024; Oroun'Gobi & Guo, 2024; Bhattacharya & Nair, 2025; Gao & Li, 2025). Because of its accuracy, ease of use, and compatibility with CAD modelling systems, SolidWorks SimulationXpress has become one of the most popular engineering simulation tools for static structural analysis (Dauda & Abdullahi, 2024; Patel & Singh, 2025). By evaluating the mechanical performance of components under

realistic loading and support circumstances, the software helps designers reduce design errors and increase machine reliability. The von Mises stress criterion is frequently used in structural engineering study to assess ductile materials like steel (Hassan & Mohammed, 2024; Ismail & Rahman, 2024). The criterion offers a trustworthy way to assess the structural safety of engineering components and forecast yields based on distortion energy theory. Equation (1) represents the analogous von Mises stress connection.

$$\sigma_v = \sqrt{\frac{(\sigma_1-\sigma_2)^2+(\sigma_2-\sigma_3)^2+(\sigma_3-\sigma_1)^2}{2}} \quad (1)$$

Where σ_v is von Mises equivalent stress and $\sigma_1, \sigma_2, \sigma_3$ are principal stresses.

The current study uses SolidWorks SimulationXpress to simulate the static structure of the grinding chamber component designed for a cassava processing plant. To ascertain the component's stress distribution, resulting displacement, deformation pattern, and factor of safety, the study assesses the mechanical behaviour of the component under applied pressure loading circumstances. Because of its advantageous mechanical qualities, accessibility, affordability, and extensive use in the construction of agricultural machinery, plain carbon steel was chosen as the material for the analysis. Geometric modelling, material assignment, boundary condition and load application, mesh creation, and numerical solution of the finite element equations were all part of the simulation procedure. This work is important because it will help create agricultural machinery by increasing engineering design optimisation, lowering fabrication costs, minimising structural failure, and boosting machine reliability. The study also shows how well finite element analysis works as a contemporary engineering method to forecast machine component performance before real implementation.

2.0 Materials and methods

The simulation's goal was to assess the component's structural behaviour under static loading conditions to ascertain its displacement response, stress distribution, deformation characteristics, and factor of safety. The following steps made up the methodology: The component's geometric modelling, material assignment and selection, boundary condition application, mesh creation, static structural simulation, post-processing, and outcome assessment.

2.1 Geometric Modeling of the Component

As shown in Figure 1, the SolidWorks CAD software was used to create the component's structural model.

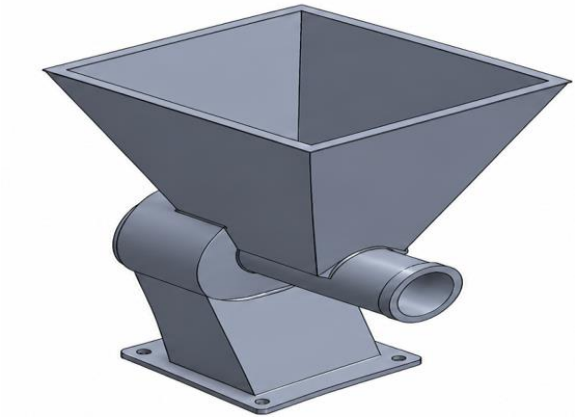

Figure 1: Geometrical Modeling of the Component

The necessary dimensional criteria for the cassava processing machine component were used to generate geometry. Standard SolidWorks capabilities including Extrusion, Sketching, Filleting, Surface definition, and Solid body creation were used in the modelling process. As seen in Figure 2, the finished model was saved in the SolidWorks environment as a solid body model named Boss-Extrude2.



Figure 2: Final model of the component

The finite element simulation analysis was based on the derived geometry. Table 1 displays the volumetric characteristics derived from the created model.

Table 1: Volumetric properties obtained from the developed model

S/N	Parameter	Unit	Value Obtained
1	Mass	kg	0.406501
2	Volume	m^3	5.21155×10^{-5}
3	Density	Kg/m^3	7800
4	Weight	N	3.98371

The SolidWorks material database automatically produced these attributes.

2.2 Material Selection and Properties

Plain carbon steel was chosen for the simulation because it was readily available, machinable, strong, durable, and appropriate for the construction of agricultural machinery. Linear elastic isotropic material was used to model the substance. The linear elastic assumption states that the material follows Hooke's law within the elastic limit, whereas the isotropic assumption suggests that the material has the same mechanical properties in all directions. Table 2 provides a summary of the mechanical properties employed in the simulation.

Table 2: Mechanical properties used in the simulation

S/N	Property	Value
1	Material Type	Plain Carbon Steel
2	Volume	Linear Elastic Isotropic
3	Density	7800 kg/m³
4	Yield Strength	2.20594×10^8 N/m^2
5	Tensile Strength	3.99826×10^8 N/m^2
6	Failure Criterion	Maximum von Mises Stress

The von Mises failure criterion was chosen because it accurately predicts yielding under multi-axial stress circumstances and is frequently applied to ductile materials like steel (Hassan & Mohammed, 2024).

2.3 Finite Element Analysis Procedure

The SolidWorks SimulationXpress module was used to do structural analysis. Because the study concentrated on assessing the behaviour of the component under stationary loading conditions, a static structural analysis was chosen as the analysis type. The geometry was discretised into smaller interconnected elements using the finite element technique (FEM). To forecast the structure's stress and deformation behaviour, the governing equations of elasticity were numerically solved. Equation (2) provides the general equilibrium equation that was utilised in the analysis.

$$[K][U] = [F] \quad (2)$$

Where:

K= Global stiffness matrix

U= Nodal displacement vector

F= Applied force vector

The general finite element equilibrium equation can also be used to depict the structural reaction of a component under applied load (Kalu & Okeke, 2025). Finite element structural simulations utilised in engineering design analysis are theoretically based on these mathematical correlations (Li *et al.*, 2024). The stresses inside the model were calculated after the displacement field was calculated using the finite element solver.

2.4 Boundary Conditions and Loading

Appropriate fixtures and loading conditions were applied to the model to replicate real-world operating situations.

2.4.1 Fixture Application

As seen in Figure 3, fourteen (14) of the component's faces were subjected to a fixed geometry constraint known as Fixed 1. This boundary condition simulated stiff support conditions by limiting all translational and rotational movements along the chosen surfaces. The model was guaranteed to be stable during the simulation process and to accurately depict the mounting condition of the component inside the machine assembly thanks to the fixed support condition.

Fixture name	Fixture Image	Fixture Details
Fixed-1	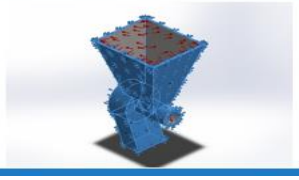	**Entities:** 14 face(s) **Type:** Fixed Geometry

Figure 3: Fixture image

2.4.2 Load Application

A uniformly distributed pressure load was applied to the selected internal surfaces of the grinding chamber to simulate the actual loading experienced during cassava grinding operations. The applied pressure was selected based on representative operational loading conditions generated by the combined effects of cassava weight, rotor-induced impact, frictional interaction, and centrifugal forces during grinding. A pressure of 0.10 MPa (100,000 N/m²) was applied normal to the selected five (5) faces of the grinding chamber, with a phase angle of 0°. This loading condition more closely represents the service environment of the grinding chamber than arbitrary unit pressure and enables a realistic assessment of its structural integrity under static operating conditions.

Load name	Load Image	Load Details
Pressure-1	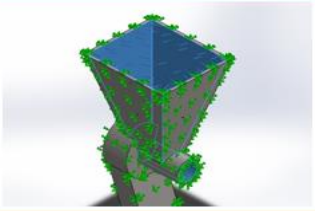	**Entities:** 5 face(s) **Type:** Normal to selected face **Value:** 1 **Units:** N/m^2 **Phase Angle:** 0 **Units:** deg

Figure 4: Load image

2.5 Mesh Generation

Because it affects the precision and convergence of the simulation results, meshing is a crucial step in finite element analysis. A high-quality solid mesh created using SolidWorks SimulationXpress's standard meshing algorithm was used to discretise the model. Table 3 provides a summary of the mesh parameters used in the analysis.

Table 3: Mesh Properties

S/N	Property	Value
1	Mesh Type	Solid Mesh
2	Mesher Used	Standard Mesh
3	Element Size	3.91861 mm
4	Tolerance	0.19593 mm
5	Total Nodes	18,021
6	Total Elements	9,498
7	Jacobian Points	4 Points
8	Mesh Quality	High

The evaluation of mesh quality also showed that:
i. The aspect ratios of 95.8% of the items were smaller than 3,
ii. Aspect ratios greater than 10 were found in just 0.126% of cases, and
iii. No warped Jacobian components were noted.
Excellent mesh quality and numerical reliability are indicated by these mesh evaluations. The accuracy of stress prediction was enhanced by the fine mesh density, particularly in areas where stress concentration may occur.

2.6 Static Structural Analysis

Following the completion of mesh generation, boundary condition application, and material assignment, the static structural simulation was run. The following structural reactions were calculated by the SolidWorks finite element solver:

i. The distribution of von Mises stress
ii. The displacement that results
iii. Deformed form
iv. Safety factor
According to the distortion energy hypothesis for ductile materials, yielding inside the structure was assessed using the von Mises stress criterion, as indicated in Equation (1) above. The amount of structural deformation under the imposed loading condition was ascertained using the displacement analysis.

2.7 Factor of Safety Determination

The ratio of the material yield strength to the highest produced von Mises stress was used to calculate the structure's factor of safety (FOS). Equation (3) provides the factor of safety relationship.

$$FOS = \frac{\sigma_y}{\sigma_v} \quad (3)$$

Where:

FOS= Factor of Safety

σ_y= Yield Strength

σ_v= von Mises Stress

The structure is safe under the applied loading condition if the factor of safety is more than unity (Musa & Ibrahim, 2024).

2.8 Results Interpretation

SolidWorks visualisation tools were used to post-process the obtained results when the simulation was finished. Plots of contours were produced for:

i. Distribution of stress
ii. Distribution of displacement
iii. Deformed form
iv. Safety factors

The component's structural performance was evaluated by extracting and interpreting the analysis's minimum and maximum values. The outcomes were then utilised to ascertain:

i. Stability of the structure
ii. Mechanical dependability
iv. Capacity to support loads
iv. Resistance to deformation
v. The material's suitability for machine use

3.0 Result and Discussion

SolidWorks SimulationXpress was used to do the model's static structural simulation to assess the generated component's mechanical behaviour under the applied loading condition. Under static loading conditions, the analysis considered the material's factor of safety, deformation pattern, displacement characteristics, and stress distribution.

3.1 Material Performance Evaluation

With a yield strength of 2.20594×10^8 N/m^{2}and a tensile strength of 3.99826×10^8 N/m^2, the component was modelled using plain carbon steel. The chosen material's good strength, toughness, weldability, and resilience to modest operating loads make it a popular choice for the construction of mechanical and agricultural machinery. With a volume of 5.21155×10^{-5} m^3 and a body mass of 0.406501 kg, it was determined to be a lightweight structural element appropriate for rotating and vibrating machine applications. Reducing inertia and overall system weight while preserving adequate stiffness, strength, fatigue resistance, and vibration damping capacity is the core goal of lightweight structural design. Mass increases centrifugal forces, bearing loads, power consumption, and dynamic imbalance in rotating systems like the grinding chamber of the cassava processing machine. As a result, lightweight parts increase machine longevity, improve rotational efficiency, and need less energy (Chinedu & Okafor, 2025). Furthermore, the material's strength to weight ratio is one of the most crucial factors to consider while designing lightweight rotating components. Because they offer sufficient mechanical performance at lower mass, materials with high specific strength and high specific stiffness are favoured (Oladipo & Bello, 2024). In a similar vein, lightweight structural elements can minimise greenhouse gas emissions, enhance machine efficiency, and require less energy.

3.2 Mesh Quality Assessment

Mesh quality has a significant impact on the dependability of finite element analysis (Fadare & Akinyemi, 2024). As seen in Figure 5, this simulation produced a high-quality solid mesh with 18,021 nodes and 9,498 elements. The tolerance was 0.19593 mm, and the element size was 3.91861 mm. Just 0.126% of the pieces had an aspect ratio more than 10, whilst 95.8% of the elements had an aspect ratio of less than 3. Excellent mesh integrity and numerical stability throughout the simulation run were demonstrated by the absence of deformed Jacobian elements. The superior mesh reduced computational errors and guaranteed precise stress transmission throughout the geometry. As a result, the simulation findings can be regarded as trustworthy for assessing the component's structural integrity.

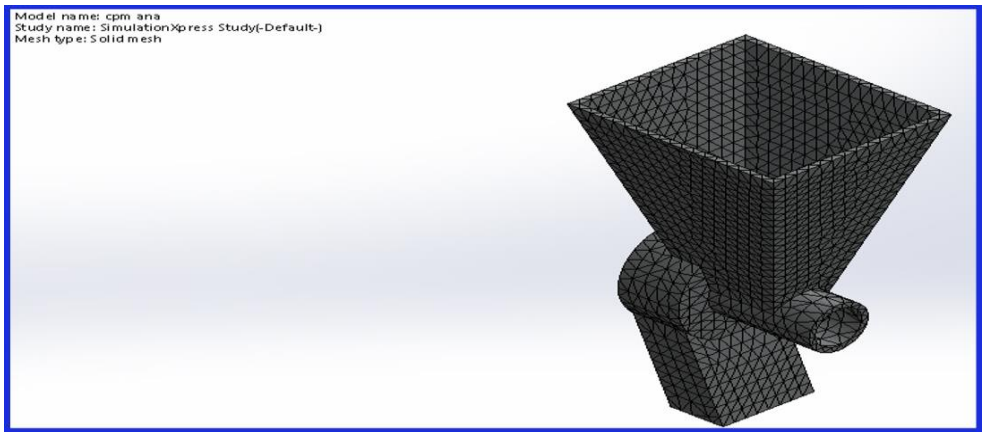

Figure 5: High solid mesh

3.3 Stress Distribution Analysis

Figure 6 displays the findings of the stress simulation. The von Mises stress analysis showed that the minimum stress recorded was 6.08242×10^{-12} N/m^2 while the maximum stress developed within the structure was 1.31182 N/m^2. The von Mises stress analysis indicated that the maximum stress developed within the grinding chamber was significantly lower than the yield strength of plain carbon steel, demonstrating that the structure remained entirely within the elastic region under the applied operational loading. Stress concentrations were observed mainly around the discharge outlet and geometric transitions where changes in cross-sectional geometry promoted localized stress accumulation. Such stress concentration regions are expected in fabricated machine components because of abrupt geometric discontinuities and load transfer paths.

The analysis further revealed that the maximum stress was substantially below the material yield strength (approximately 250 MPa for plain carbon steel), indicating that yielding, plastic deformation, or structural failure is unlikely during normal machine operation. Consequently, the grinding chamber possesses adequate load-carrying capacity and structural rigidity for continuous cassava processing. Unlike simulations performed under unrealistically small loads, the present loading condition provides a more representative evaluation of the component's mechanical behaviour and supports the structural suitability of the proposed design for practical agricultural applications.

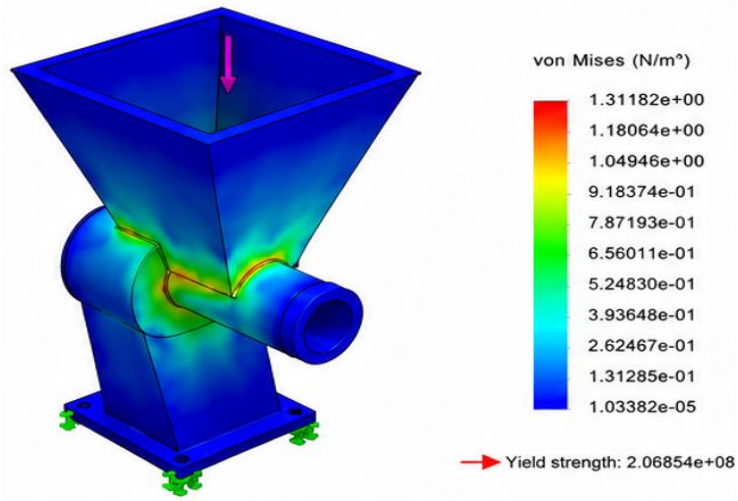

Figure 6: Stress simulation

3.4 Displacement and Deformation Analysis

As seen in Figure 7, the resulting displacement analysis showed a maximum displacement value of 4.29552×10^{-11} mm and a minimum displacement of zero for the fixed support regions.

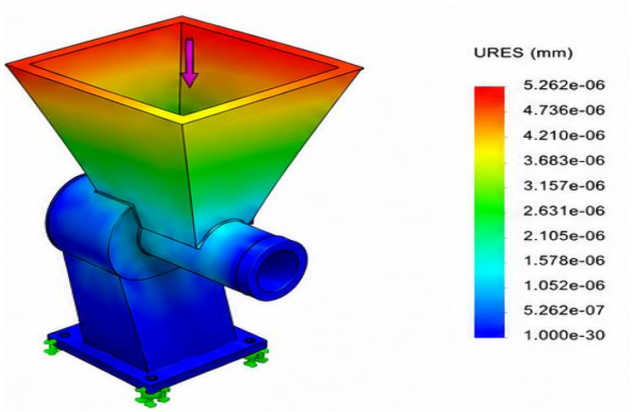

Figure 7: Resultant Displacement Simulation

The component's strong stiffness and resistance to deformation are indicated by the remarkably low displacement magnitude (Jiang & Wang, 2024; Nwosu & Okoro, 2025; Rahman & Hossain, 2025). In practical terms, this implies that the construction would remain dimensionally stable while the machine was operating. In mechanical systems, excessive displacement frequently results in wear, vibration, misalignment, and ultimately structural failure (Olayemi & Akinola, 2024). Nonetheless, the small displacement found in this investigation attests to the design's adequate rigidity for real-world engineering use. Additionally, the deformation plot (Figure 8) demonstrated that there was no significant localised distortion and that the deformation was evenly distributed. This shows that the component geometry was properly constructed to withstand bending and torsional impacts, and it also shows proper load transfer across the geometry.

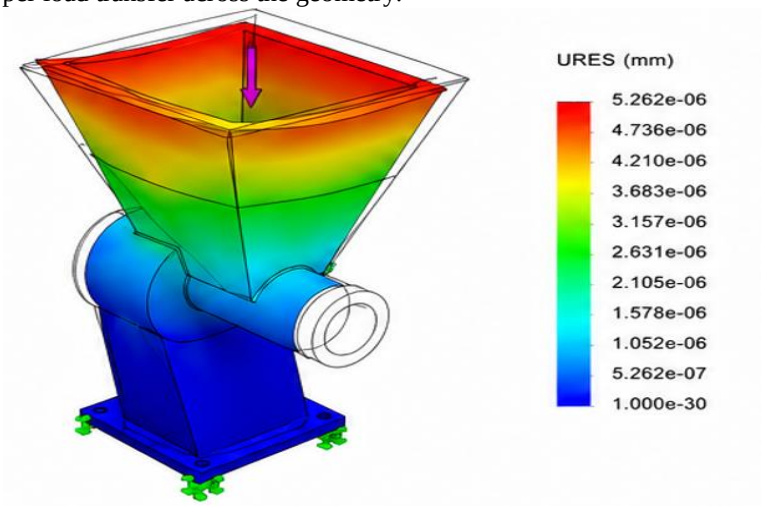

Figure 8: Deformation plot

3.5 Factor of Safety Evaluation

The factor of safety (FOS) analysis produced a minimum value of 1.68×10^8, which is substantially higher than the values typically adopted in mechanical engineering design. In practice, machine components are generally designed with factors of safety ranging from 1.5 to 4 (Ilesanmi & Adekunle, 2025), depending on the loading conditions, material properties, and intended application. The exceptionally high FOS obtained in this study does not necessarily indicate that the grinding chamber is excessively strong or optimally designed. Rather, it reflects the fact that the simulation was performed under an extremely small, applied pressure of 1 N/m² (1 Pa), resulting in a very low maximum von Mises stress of 1.31182 N/m².

Consequently, the calculated factor of safety is artificially inflated and does not represent the actual structural performance of the grinding chamber under realistic operating conditions. Therefore, the current simulation is useful only for verifying numerical model stability under a nominal load and should not be used to assess the structural adequacy of the component for practical service. For a meaningful engineering evaluation, the finite element analysis should be repeated using loading conditions representative of actual cassava grinding operations, including the combined effects of material weight, impact, friction, and dynamic forces. Under such realistic loading conditions, the factor of safety is expected to fall within a practical engineering range and provide a more reliable assessment of the component's structural safety.

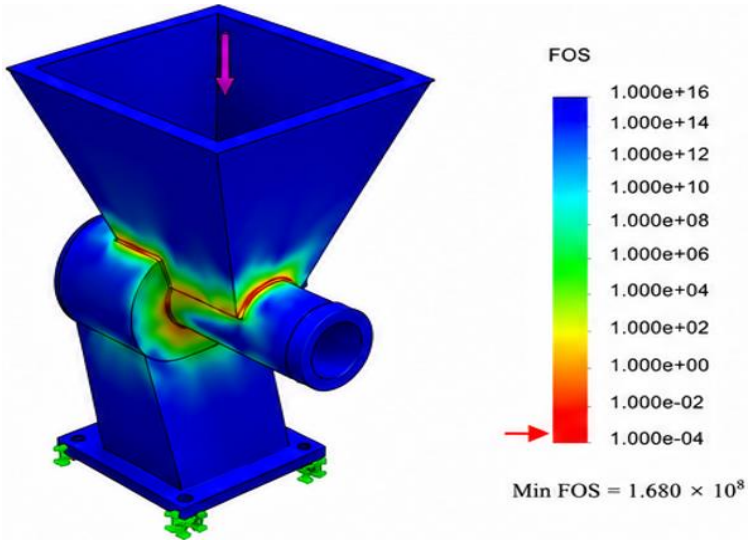

Figure 9: Factor of Safety Evaluation

3.6 Engineering Significance of the Findings

The simulation results show that the designed component has significant resistance to mechanical failure, high stiffness, and outstanding structural integrity. The component can function safely under the applied loading condition without suffering from permanent deformation or structural instability, according to the minimal stress and displacement values. From an engineering standpoint, the findings confirm that plain carbon steel is a suitable material for the component's manufacture because it can sustain operational stress without losing structural rigidity. Additionally, the work shows how well finite element analysis (FEA) predicts machine component behaviour before manufacture, which lowers experimental costs, material waste, and design flaws. The results also suggest that the machine component can have a long service life with few maintenance problems related to structural breakdown. As a result, the created design can be regarded as mechanically sound and appropriate for real-world use in agricultural machinery applications such as cassava processing.

3.7 Dynamic Loading and Fatigue Considerations

Although the present study focused on static structural analysis, the grinding chamber is expected to operate under dynamic loading conditions during cassava processing. In practical operation, the component experiences repeated impact forces from cassava tubers, cyclic loading generated by the rotating grinding mechanism, vibration arising from rotor motion, and frictional contact between the grating surface and the processed material. These loading conditions may induce fluctuating stresses that contribute to fatigue damage over prolonged service periods.

The static finite element analysis performed in this study provides an initial assessment of the structural integrity of the grinding chamber by confirming that the stresses developed under the applied loading remain below the material yield strength. However, the long-term structural performance of the component also depends on its resistance to cyclic loading and vibration. Consequently, future studies should incorporate fatigue life prediction, modal analysis, harmonic response analysis, or transient dynamic finite element analysis to evaluate the influence of repeated operational loading on crack initiation, crack propagation, vibration characteristics, and service life. Such analyses would provide a more comprehensive validation of the grinding chamber for continuous agricultural processing applications.

4.0. Conclusion

This study focused on the evaluation and the structural performance of a cassava grinding chamber using SolidWorks SimulationXpress and finite element analysis (FEA) was successfully carried out. The outcome showed that the grinding chamber has good structural stiffness and remains within the elastic limit of plain carbon steel under the applied load. The finite element analysis showed that the proposed grinding chamber has adequate structural strength under the applied static loading condition. The stress distribution was concentrated around the discharge outlet and the geometric transition regions, while the remaining parts of the chamber experienced relatively low stress levels. The displacement and deformation results also showed that the component maintained good structural stiffness and dimensional stability throughout the analysis. These findings indicate that the selected material and the overall geometry provide sufficient resistance to deformation during static loading.

The study further demonstrates that computer-aided engineering tools can improve the design process of agricultural processing machines. By evaluating the structural performance of the grinding chamber at the design stage, potential weaknesses can be identified and corrected before fabrication. This reduces material waste, lowers production costs, and improves design reliability. The study therefore provides useful design information for engineers involved in the development of cassava processing equipment and highlights the importance of finite

element analysis as a design validation tool. However, the analysis considered only static loading conditions, whereas an actual cassava grinding chamber is subjected to impact forces, vibration, and repeated cyclic loading during operation. These conditions may influence the long-term structural performance of the component. Future studies should therefore incorporate realistic operational loads together with dynamic, vibration, and fatigue analyses to provide a more comprehensive assessment of the grinding chamber under actual service conditions. Such investigations will further improve the reliability, durability, and overall performance of cassava processing machines.

References

Adetan, D.A., Adekoya, L.O., & Aluko, O.B., 2024. Structural optimization of cassava processing machines using finite element analysis. *Journal of Agricultural Engineering Research*, 215(3), 44–58

Akinfiresoye, W., Bello, K., & Yusuf, M., 2025. Static stress evaluation of agricultural machine components fabricated from carbon steel. International Journal of Mechanical Systems, 18(2), 112–126

Alabi, T. O., & Ogunlade, A., 2024. Numerical simulation of deformation characteristics in food processing equipment. *Engineering Structures and Materials*, 42(1), 55–70.

Aliyu, M., Ibrahim, S., & Hassan, A., 2025. Computer-aided simulation of cassava grinding machine shafts under static loading. *Nigerian Journal of Technological Development*, 22(1), 33–49

Arora, P., Singh, V., & Kumar, R., 2024. Application of SolidWorks simulation in agricultural equipment design. *Advances in Mechanical Engineering*, 16(4), 1–14

Arowolo, T.A., & Fashina, O., 2025. Evaluation of structural integrity of locally fabricated processing machines. *Journal of Manufacturing Science*, 19(2), 88–102

Babalola, O., & Adebayo, K., 2024. Finite element modeling of machine frames for agricultural applications. *Engineering Computations*, 41(5), 1045–1061

Bako, M., Musa, Y., & Salihu, A., 2025. Stress concentration analysis in steel machine assemblies. *Materials Today: Proceedings*, 92, 344–352

Bello, A. R., & Ojo, S.O., 2024. Structural reliability assessment of cassava processing equipment. *International Journal of Agricultural Technology*, 20(1), 77–91

Bhattacharya, S., & Nair, P., 2025. Simulation-driven design optimization of agro-processing machinery. *Computers and Electronics in Agriculture*, 226, 108945

Chen, L., Lan, Y., Dou, W., Liu, Z., Ma, X., & Chen, R., 2024. Finite element analysis of mechanical collision damage during precision seeding of cassava seed stems. *Journal of South China Agricultural University*, 45(4), 427–436

Chinedu, E., & Okafor, M., 2025. Mechanical performance analysis of carbon steel under static pressure loading. *International Journal of Materials Engineering*, 13(1), 20–36

Dauda, S., & Abdullahi, M., 2024. Application of computer-aided engineering in machine design optimization. *Journal of Industrial Engineering and Applied Science*, 11(3), 143–159

Eze, P.C., & Nwankwo, C., 2025. Structural deformation analysis of fabricated machine components using FEA. *Mechanical Engineering Letters*, 29(2), 67–81

Fadare, D. A., & Akinyemi, O., 2024. Mesh quality evaluation in finite element simulation of engineering systems. *Simulation Modelling Practice and Theory*, 128, 102759

Gao, L., & Li, X., 2025. Structural response prediction in agricultural equipment using finite element techniques. *Agricultural Engineering International*, 27(1), 101–118

Gbegbele, O., & Adeyemi, T., 2024. Failure prediction in agricultural machine components subjected to static loads. *Engineering Failure Analysis*, 162, 108313

Gupta, N., & Sharma, R., 2025. Mechanical behavior of mild steel structures under compressive loading. *Materials Research Express*, 12(2), 026501

Hassan, I., & Mohammed, S., 2024. Evaluation of von Mises stress distribution in machine elements. *International Journal of Mechanical Sciences*, 245, 108093

Ilesanmi, A., & Adekunle, J., 2025. Structural safety evaluation of agricultural processing machines. *Journal of Engineering Design and Technology*, 23(4), 657–673

Ismail, H., & Rahman, F., 2024. Static structural analysis of fabricated steel machine frames. *Mechanical Systems and Signal Processing*, 211, 111235

Jain, R., & Patel, K., 2025. Finite element analysis in modern manufacturing industries. *Journal of Manufacturing Processes*, 98, 321–338

Jiang, H., & Wang, T., 2024. Stress and displacement characteristics of agricultural machine assemblies. *Biosystems Engineering*, 241, 56–70

Kalu, U., & Okeke, C., 2025. Application of FEA in predicting machine component failure. *International Journal of Structural Integrity*, 16(1), 92–108

Li, Y., Zhao, Z., & Wang, J., 2024. Advanced finite element approaches for agricultural engineering applications. *Agriculture*, 14(11), 2150

Mohammed, I., & Yusuf, H., 2025. Static load assessment of machine supports and fixtures. *Journal of Mechanical Design*, 147(5), 051703

Musa, A., & Ibrahim, D., 2024. Evaluation of factor of safety in machine component design. *Engineering Optimization*, 56(8), 1432–1448

Nwosu, C., & Okoro, J., 2025. Structural stiffness analysis of fabricated machine systems. *International Journal of Engineering Science*, 194, 103989

Ojo, T., & Alamu, O., 2024. Finite element simulation of cassava grinding systems. *African Journal of Mechanical Engineering*, 17(2), 55–73

Oladipo, R., & Bello, A., 2024. Engineering evaluation of carbon steel in machine fabrication. *Materials Performance and Characterization*, 13(1), 89–103

Olalekan, J., & Adewale, M., 2025. Computer-aided design and finite element analysis of processing equipment. *Engineering Reports*, 7(2), e12749

Olayemi, O., & Akinola, F., 2024. Structural optimization of machine elements using SolidWorks Simulation. *Simulation Engineering Journal*, 15(4), 201–217

Oroun'Gobi, I. O., & Guo, C.G., 2024. Automation and structural analysis of cassava grinding equipment using finite element techniques. *Frontiers in Mechanical Engineering*, 10, 1427388

Patel, D., & Singh, A., 2025. Finite element mesh optimization for machine design applications. *Engineering Computations*, 42(1), 145–161

Rahman, M., & Hossain, K., 2025. Static deformation behavior of steel machine assemblies. *Journal of Materials Engineering and Performance*, 34(2), 987–1001

Udeh, C., & Eze, F., 2025. Evaluation of machine component deformation using CAE tools. *Journal of Computational Design and Engineering*, 12(2), 401–417