UNIZIK JOURNAL OF AGRICULTURAL AND BIOSYSTEMS ENGINEERING

Journal homepage: https://journals.unizik.edu.ng/ujabe/

UJABE

June (2026), 1(3): 148-161

ISSN: 3141-2912

DEVELOPMENT AND PERFORMANCE EVALUATION OF A MOTORIZED TWO-ROW IRISH POTATO PLANTER FOR IMPROVED PRODUCTIVITY IN SMALLHOLDER FARMING SYSTEMS

***[1]A.M. Makolo, M.T. Ikyaator, and I.S. Ijiga**

[1]Department of Agricultural and Bio-Systems Engineering, Joseph Sarwuan Tarka University – Makurdi, Benue State

**Corresponding Author's E-mail: ammakolo@uam.edu.ng*

Received: 10th April 2026; **Accepted:** 18th May 2026; **Available Online:** 30th June 2026

ABSTRACT

Irish potato (*Solanum Tuberosum L.*) is a globally important food and cash crop that contributes significantly to food security, income generation, and nutrition, particularly in developing economies. Despite its importance, Irish potato production in many regions remains constrained by labor-intensive traditional planting methods that result in poor seed placement, inconsistent planting depth, and reduced field efficiency. Agricultural mechanization of planting operations offers a viable pathway for improving productivity, uniformity, and timeliness of operations, especially for smallholder farmers. This study presents the design, development, and performance evaluation of a motorized Irish potato planter suitable for small- to medium-scale farming systems. The planter was developed using locally available materials and evaluated under field conditions such as tractor tilled sandy-loam soil, flat topography, and different operating speeds of 1.8 kmh^{-1}, 2.5 kmh^{-1}, 3.0 kmh^{-1} for seed spacing accuracy, planting depth uniformity, field capacity, field efficiency, and seed damage. Performance results demonstrate significant improvements in planting uniformity of 307 ± 20 mm and operational efficiency of 83 % when compared with manual planting practices. The study demonstrated that the developed Irish potato planter performed satisfactorily under field conditions, achieving optimum performance at an operational speed of 2.5 km h^{-1} with a metering efficiency of 95%. The findings further indicate that the adoption of the planter has significant potential to improve Irish potato production while providing a technically feasible and economically affordable planting option for smallholder farmers.

Keywords: Agricultural Mechanization; Field Efficiency; Irish Potato Planter; Metering Efficiency; Motorized Planter; Planting Uniformity; Smallholder Farming; *Solanum Tuberosum L.*

1.0 INTRODUCTION

Irish potato (*Solanum tuberosum L.*) is one of the most important food crops worldwide and is recognized by the United Nations as a strategic crop for global food security (Devaux *et al.*, 2014). The crop is cultivated in more than 100 countries across Africa, Asia, Europe, and the Americas, where it serves as a staple food and an essential source of carbohydrates, vitamins, and minerals (Burlingame *et al.*, 2009; FAO, 2021). Global potato production exceeds 300 million metric tonnes annually, with more than one billion people depending on the crop for food and income (Dongyu, 2022). In Sub-Saharan Africa, Irish potato production plays a crucial role in rural livelihoods and national food systems. However, yields in many developing regions remain significantly lower than global averages due to constraints such as limited access to improved seed, poor agronomic

practices, and inadequate mechanization (Devaux *et al.*, 2014, Gildemacher *et al.*, 2009). Among these constraints, planting operations represent a major bottleneck.

2.0 MATERIALS AND METHODOLOGY

2.1 Description of the Two-Row Irish Potato Planter

The developed Irish potato planter consists of the land wheel, metering device, feeders, frame, sprocket, and chain arrangement. The metering mechanism consists of tubers cups (buckets) attached to the upper rotating shaft, these shafts are driven by a chain and sprocket system that is mechanically linked to the land wheel. Figure 1 below is the isometric drawing of the two-row Irish potato planter showing the component parts, and figure 2 shows the exploded orographic view of each of the components. While figure 3 is the dimensional view of all components. The planter is power tiller-mounted by first attaching it to the frame of the planter, which is hitched to either of the linkage as shown in figure 4.

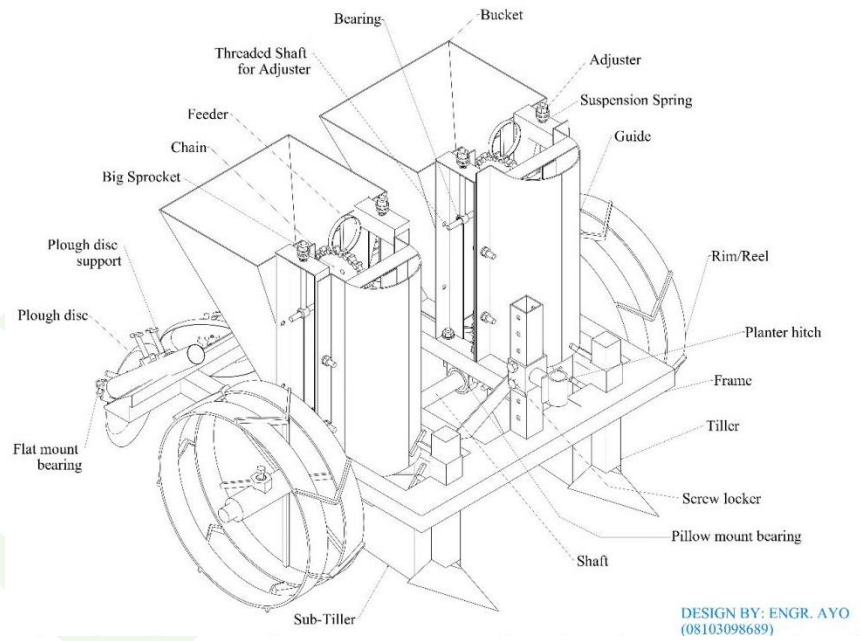

Figure1: Isometric view of the Two-row Irish potato planter

As the planter moves forward, the wheels' rotation drives the chain, causing the shafts and tubers cups to rotate. The tubers cups scoop up potato tubers from the hopper and release them into guide pipes, which direct them accurately into the furrows. The metering unit is driven by the land wheel and can meter eight (four per row) Irish potato tubers per revolution of the land wheel with an

average spacing of 280mm. The land-wheel has a diameter of (420mm) and covers a distance of 1.12 meters in a revolution, allowing four Irish potato tubers pieces to be planted on each row.

2.2 Method of Administering Planting

Firstly, the field was prepared by ploughing and harrowing using a 60 hp Massey Ferguson tractor coupled with a three-disc plough and a 16-disc harrow to achieve a well-pulverized sandy-loam seedbed suitable for planter operation. Thereafter, ridges were formed using a tractor-mounted ridger with an adjustable row spacing of 750 mm and a second pass with planter attached to the 14 kW power tiller for the planting operation. Medium-sized Irish potato seed tubers with an average diameter of 35-55 mm and average weight of 40-80 g were used for the planting trials.

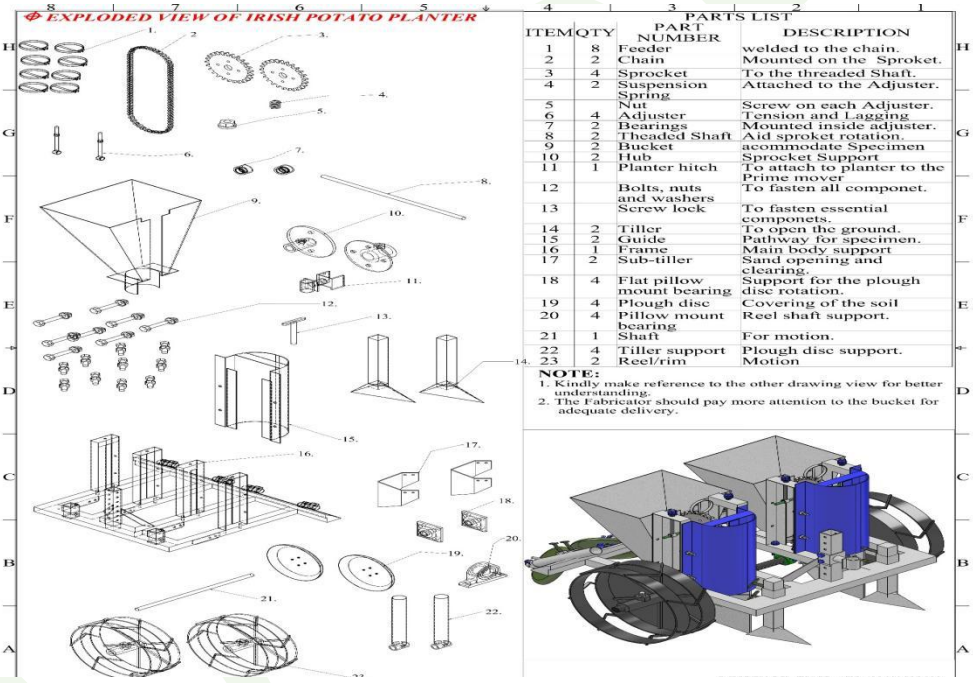

Figure 2: Exploded Orthographic View of Each Components

The Irish potato tubers pieces loaded in the hopper flow in a continuous pattern, dropping into the guide pipe that guides the potato directly into the ridge at a depth of 100mm. The tiller, a component attached to the forefront of the planter, is adjustable to suit the farmer's planting depth specifications. It opens the ridge to create a furrow so that Irish potato tubers dropped on the ridges do not fall off to the bare ground. The guide pipe guides the Irish potatoes safely into the furrow created by the tiller. When the Irish potato tubers piece drops into the furrow, the coverer completes the planting by burying the Irish potato tubers piece with the soil.

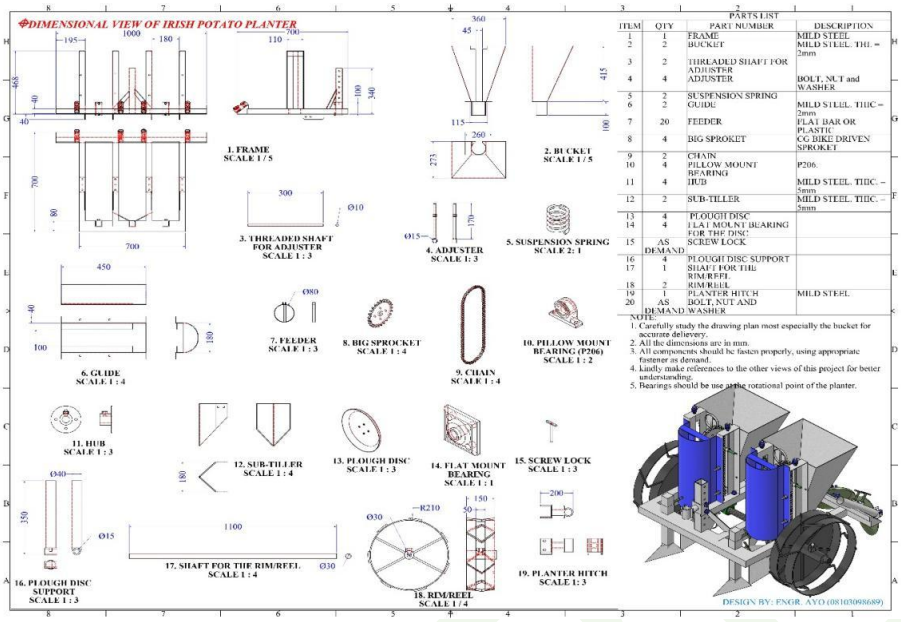

Figure 3: Dimensional view of the Planter

The coverer comprises four disc ploughs adjusted at angles of 45° and 30°, respectively. The 30° disc first collects the soil to partly cover the Irish potato tubers, while the 45° disc collects the soil that finally buries the tubers (Makolo *et al.*, 2019). This metering mechanism, with its various adjustable components, minimizes tubers wastage and ensures even spacing and optimal plant growth conditions by providing precise and reliable tubers placement.



Figure 4: View of the Fabricated Two-Row Irish Potato Planter Hitched to a Power Tiller

2.3 Determination of Parameter Relevant to Irish Potato Planting

The design parameters relevant to Irish potato planting were determined and considered in the design of the Irish potato planter. These parameters or properties determined include the mean length, width, thickness, angle of repose, mean roundness, mean surface area, and volume. A number of instruments were used in various measurements and determination of the dimensions and properties of the selected Irish potato varieties. The equipment used for determining the physical and mechanical properties of the Irish potato tubers included a digital Vernier caliper with a measuring range of 0-150 mm and accuracy of ±0.01 mm for measuring tuber length, width, and thickness, a wooden frame box of dimensions 500 mm × 500 mm × 500 mm used for determining the angle of repose, an electronic weighing balance with a capacity of 5 kg and sensitivity of ±0.01 g for measuring tuber weight, and a measuring cylinder (2000 ml capacity) for volume determination.

2.3.1 Determination of geometric mean diameter

The geometric mean diameter of the potato was determined from the measured dimensions of the potato given in equation (1) (Saleh and Awolola, 2022).

$$Dg = \sqrt[3]{L \times W \times T} \quad \ldots\ldots\ldots\ldots\ldots\ldots\ldots\ldots\ldots\ldots \quad (1)$$

Where L = length or longest side of the potato (mm)

W = width or minor axis of the potato (mm)

T = thickness of the potato (mm)

Dg = geometric mean diameter (mm)

Table 1: Specification of the Two-Row Irish Potato Planter

Parameter	Specification
Overall Length of Machine	1000mm
Overall Width of Machine	1000mm
Overall Height of Machine	1000mm
Overall Weight of Machine	300.4kg
Metering Device Capacity	8 Irish Potatoes tubers
Average Planting Space	280mm
Draw Pull	14kw
Theoretical Field Capacity	11.95hr/ha

2.3.2 Sphericity determination

The sphericity of the potato was determined from the potato dimensions that were earlier determined in the previous equation (1) from equation (2) (Loghavi *et al.*, 2011):

$$\Phi = \frac{di}{dc} \quad \ldots\ldots\ldots\ldots\ldots\ldots\ldots\ldots\ldots\ldots \quad (2)$$

Where Φ = Sphericity of the object

di = diameter of the largest inscribed circle

dc = diameter of the smallest circumscribed circle

2.3.3 Surface area determination

The surface area was determined using the potato geometric dimensions given by equation (3) (Mohsenin, 2010):

$$As = \pi Dg^2 \quad \ldots\ldots\ldots\ldots\ldots\ldots\ldots\ldots\ldots\ldots \quad (3)$$

Where: As = surface area (mm2)

Dg = geometric mean diameter (mm)

2.3.4 Volume determination

Due to the irregular shape of the potatoes, their volume was determined by taking the three different dimensions; length, width and thickness, then the volume was estimated by using equation (4) (Mohsenin, 2010):

$$V = \frac{\pi .L.W.H}{6} \quad \ldots\ldots\ldots\ldots\ldots\ldots\ldots\ldots\ldots\ldots \quad (4)$$

Where: V = volume, mm3

L = length of potato, mm

W = width of potato, mm

H = thickness, mm

2.3.5 Bulk density determination

Equation (5) was used to determine the bulk density (Saleh and Awolola, 2022).

$$\rho b = \frac{weigth\ of\ packed\ material}{known\ volume} \quad \ldots\ldots\ldots\ldots\ldots\ldots\ldots\ldots\ldots\ldots\ (5)$$

Where ρb = the bulk density in kg/m3

2.3.6 Weight determination

The weight of a single potato tuber was determined by the use of an electronic mettle balance. The Irish Potato tubers were placed on the balance one by one and the weight recorded (Saleh and Awolola, 2022).

2.3.7 Angle of repose determination

The angle of repose was determined using the method described by (Mohsenin, 2010). In this method, a frame box is mounted on a flat wooden surface and then gently tilted until the Irish potato just begins to slide then it will be measured as the angle of repose for the potatoes. The angle of repose was found to be 28°.

2.4 Evaluation of Planter

The performance of the power tiller-mounted two-row Irish potato planter was evaluated based on the metering efficiency, planting depth, intra-row spacing uniformity, operational speed, field capacity and fuel consumption. The planting depth and intra-row spacing were determined by measuring the furrow depth and the distance between two Irish potato seeds using a graduated tape as shown in figure 3. While metering efficiency was determined by feeding a know number of Irish potato seeds in the hopper and taken note of the number seeds that were successfully planted.



Figure 3: Intra-Row Spacing of Irish Potato using a Tape

3.0 RESULTS AND DISCUSSION

Table 2 presents the metering efficiency of the developed motorized two-row Irish potato planter at operational speeds of 1.8, 2.5, and 3.0 km h^{-1}. The mean metering efficiencies obtained were 98%, 95%, and 92%, respectively. The result indicates that metering efficiency decreased with increase in forward speed. At lower operational speed of 1.8 km h^{-1}, the planter achieved the highest metering efficiency because the seed metering cups had adequate time to pick and release the potato tubers properly into the delivery tubes. However, as the operational speed increased to 3.0 km h^{-1}, vibration and rapid rotation of the metering mechanism resulted in occasional misses and irregular seed release, thereby reducing the metering efficiency. Similar observations were reported by Kumar *et al*. (2018), who observed that increased forward speed reduced the precision of potato seed delivery in a power tiller-operated potato planter. Nevertheless, the minimum metering efficiency of 92% obtained in this study compares favorably with the 82% reported by Makolo *et al.* (2019) for a two-row yam sett planter and confirms the suitability of the developed planter for smallholder potato production systems.

Table 2: Metering Efficiency at Different Speeds

Operational Speed (km/h)	Replication			Mean Metered Tubers	Metering Efficiency (%)
	1st	2nd	3rd		
1.8	98	99	97	98.0	98.0
2.5	95	94	96	95.0	95.0
3.0	92	93	91	92.0	92.0

The corresponding ANOVA result presented in Table 3 showed an F-value of 27.0, which exceeded the F-critical value of 5.14, with a p-value of 0.001 less than 0.05. This implies that operational speed had a statistically significant effect on metering efficiency. Therefore, the variation in metering efficiency across the tested operational speeds was not due to random error but due to the influence of forward speed on the planter metering mechanism. The optimum metering performance was achieved at 1.8 km h^{-1}.

Table 3: Metering Efficiency ANOVA

Source of Variation	*SS*	*df*	*MS*	*F*	*P-value*	*F crit*
Between Groups	54	2	27	27	0.001	5.143253
Within Groups	6	6	1			
Total	60	8				

Table 4 presents the planting depth consistency of the planter at different operational speeds. The mean planting depths obtained were 49 mm, 50 mm, and 52 mm at operational speeds of 1.8, 2.5, and 3.0 km h^{-1}, respectively, compared with the target planting depth of 50 mm. The selected target depth was based on agronomic recommendations for Irish potato cultivation, where planting depths between 50 and 100 mm promote proper tuber emergence, moisture conservation, and root establishment (Temesgen *et al.*, 2017). The result showed that the planter maintained relatively uniform planting depth across all operational speeds. The operational speed of 2.5 km h^{-1} produced the most accurate planting depth with exact conformity to the target value. The slight increase in planting depth observed at 3.0 km h^{-1} may be attributed to increased penetration force and vibration of the furrow opener during operation. Similar findings were reported by Temesgen *et al.* (2017), who observed that consistent planting depth enhances germination uniformity and crop establishment in Irish potato cultivation.

Table 4: Planting Depth Consistency

Operational Speed (km/h)	Replication			Mean (mm)	Variance	Std. Dev (mm)
	1st	2nd	3rd			
1.8	48	50	49	49.0	2	1.41
2.5	51	49	50	50.0	2	1.41
3.0	52	53	51	52.0	0.5	0.71

***Target Depth = 50 mm**

The ANOVA result shown in Table 5 gave an F-value of 4.33, which was lower than the F-critical value of 9.55, while the p-value of 0.130 was greater than 0.05. This indicates that operational speed had no statistically significant effect on planting depth. Therefore, despite slight numerical variations in depth values, the planter was able to maintain satisfactory depth uniformity under all the tested speeds. This demonstrates the stability and effectiveness of the furrow opening and covering mechanisms of the developed planter.

Table 5: Planting Depth ANOVA

Source of Variation	*SS*	*df*	*MS*	*F*	*P-value*	*F crit*
Between Groups	13	2	6.5	4.333333	0.130395	9.552094
Within Groups	4.5	3	1.5			
Total	17.5	5				

Table 6 shows the intra-row spacing uniformity obtained during planter evaluation. The mean spacing values recorded were 295 mm, 305 mm, and 315 mm at operational speeds of 1.8, 2.5, and

3.0 km h^{-1}, respectively, against the target spacing of 300 mm. The target spacing was selected based on recommended agronomic spacing for Irish potato cultivation to ensure adequate plant population, nutrient utilization, and tuber development. The result indicates that increasing operational speed caused a corresponding increase in spacing between planted tubers. This may be attributed to increased forward travel velocity, which reduced the synchronization between tuber release and planter movement. The spacing obtained at 2.5 km h^{-1} was closest to the target spacing and therefore considered the most suitable operational speed for optimum planting accuracy. The average spacing value of 305 mm obtained at this speed agrees closely with the recommended planting geometry for mechanized Irish potato production reported by Kumar et al. (2018).

Table 6: Intra-Row Spacing Uniformity

Operational Speed (km/h)	Replications			Mean (mm)	Variance	Std. Dev (mm)
	1st	2nd	3rd			
1.8	292	298	295	295.0	9	3.0
2.5	308	302	305	305.0	9	3.0
3.0	316	314	315	315.0	1	1.0

***Target spacing = 300 mm**

The ANOVA result presented in Table 7 showed an F-value of 47.37, which was significantly higher than the F-critical value of 5.14, while the p-value of 0.00021 was less than 0.05. This confirms that operational speed significantly influenced intra-row spacing uniformity. Similar observations were reported by Kumar et al. (2018), who stated that excessive planter speed adversely affects seed spacing accuracy due to irregular seed drop and machine vibration. Therefore, lower to moderate operational speeds are preferable for achieving better planting precision.

Table 7: Intra-Row Spacing ANOVA

Source of Variation	*SS*	*df*	*MS*	*F*	*P-value*	*F crit*
Between Groups	600	2	300	47.36842	0.000211	5.143253
Within Groups	38	6	6.333333			
Total	638	8				

Table 8 presents the relationship between operational speed and field capacity of the planter. At operational speeds of 1.8, 2.5, and 3.0 km h^{-1}, the theoretical field capacities obtained were 0.216 ha h^{-1}, 0.300 ha h^{-1}, and 0.360 ha h^{-1}, respectively, while the corresponding effective

field capacities were 0.180 ha h^{-1}, 0.240 ha h^{-1}, and 0.270 ha h^{-1}. Similarly, the field efficiencies recorded were 83.3%, 80.0%, and 75.0%, respectively. The results indicate that theoretical and effective field capacities increased with increase in operational speed due to the larger area covered per unit time. However, field efficiency decreased as speed increased. The reduction in field efficiency at higher speeds may be attributed to increased turning losses, vibration, seed misses, and operational interruptions during planting. Similar trends were reported by Ziblim et al. (2025), who observed that field efficiency decreases with increase in travel speed due to increased operational losses.

Table 8: Operational Speed and Field Capacity

Operational Speed (km/h)	Replications			Mean Theoretical FC (ha/h)	Mean Effective FC (ha/h)	Field Efficiency (%)
	1st	2nd	3rd			
1.8	0.215	0.217	0.216	0.216	0.180	83.3
2.5	0.300	0.301	0.299	0.300	0.240	80.0
3.0	0.361	0.358	0.360	0.360	0.270	75.0

*TFC = $\frac{speed \times width}{10}$; EFC = $\frac{Area\ covered}{time\ teken}$; FE = $\frac{EFC}{TFC} \times 100$

*Working width = 1.2 m

Comparing the three operational speeds, 2.5 km h^{-1} provided the best compromise between field capacity, metering efficiency, and planting accuracy. Although 3.0 km h^{-1} produced the highest field capacity, the associated reduction in metering efficiency and spacing accuracy makes it less suitable for precision planting operations. The effective field capacity of 0.240 ha h^{-1} obtained at 2.5 km h^{-1} represents a significant improvement over manual Irish potato planting operations commonly practiced by smallholder farmers.

Table 9: Operational Speed and Field Capacity ANOVA

Source of Variation	*SS*	*df*	*MS*	*F*	*P-value*	*F crit*
Between Groups	0.031256222	2	0.015628	10819.46	2.13E-11	5.143253
Within Groups	8.66667E-06	6	1.44E-06			
Total	0.031264889	8				

The ANOVA result shown in Table 9 gave an F-value of 10,819.46, which greatly exceeded the F-critical value of 5.14, while the p-value of 2.13×10^{-11} was far below 0.05. This confirms that operational speed had a highly significant effect on field capacity. Therefore, increasing speed significantly improved area coverage per unit time, although excessive speed reduced planting precision and field efficiency. Figure 4 below illustrates the relationship between operational speed and field efficiency. The figure showed that field efficiency declined progressively from 83.3% at 1.8 km h^{-1} to 75.0% at 3.0 km h^{-1}. The decrease in efficiency with increase in speed is associated with greater machine vibration, increased wheel slippage, and higher turning losses during operation. This trend agrees with the findings of Ziblim *et al.* (2025), who reported that excessive operational speed adversely affects machine efficiency under field conditions.

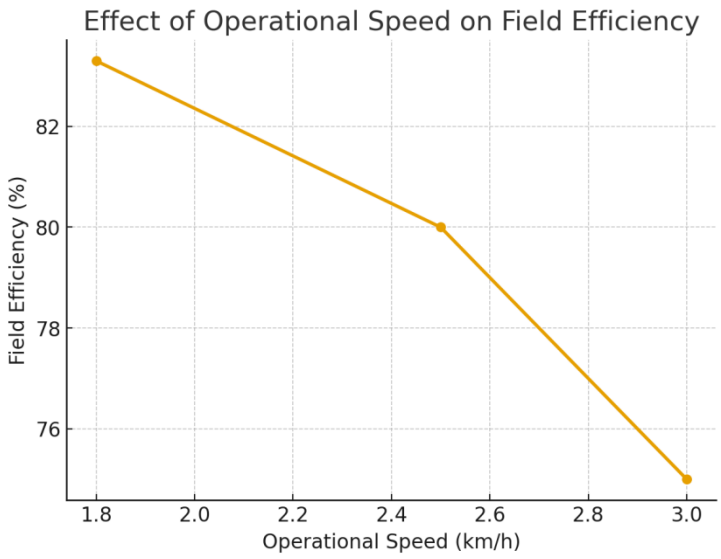

Figure 4: Relationship between Operational Speed and Field Efficiency

Table 10 presents the fuel consumption rates of the planter at different operational speeds. The average fuel consumption values obtained were 1.03 L h^{-1}, 1.30 L h^{-1}, and 1.60 L h^{-1} at operational speeds of 1.8, 2.5, and 3.0 km h^{-1}, respectively. The result showed that fuel consumption increased with increase in speed because higher engine power was required to overcome additional draft, vibration, and rolling resistance at higher operational speeds. However, the operational speed of 2.5 km h^{-1} provided a balance between planting performance, field capacity, and fuel economy. At this speed, the planter achieved satisfactory metering efficiency of 95%, field efficiency of 80%, and acceptable fuel consumption of 1.30 L h^{-1}. This suggests that moderate operational speed

is preferable for achieving efficient and economical planting operation in smallholder Irish potato production systems.

Table 10: Fuel Consumption Rate

Operational Speed (km/h)	Replications			Mean Fuel Consumption (L/hr)
	1st	2nd	3rd	
1.8	1.0	1.1	1.0	1.03
2.5	1.3	1.4	1.2	1.30
3.0	1.6	1.7	1.5	1.60

4.0 CONCLUSION

It was concluded that:

i. The modification and evaluation of the power-tiller mounted two-row Irish potato planter demonstrated satisfactory technical feasibility and operational efficiency under field conditions.

ii. The planter achieved optimum performance at an operational speed of 2.5 km/h^{-1} with a metering efficiency of 95%, effective field capacity of 0.240 ha h^{-1}, and field efficiency of 80%.

iii. The planter maintained an average intra-row spacing of 305mm and planting depth of 50 mm, indicating satisfactory planting uniformity and effective depth control.

iv. Increasing operational speed improved theoretical field capacity up to 0.360 ha h^{-1} at 3.0 km h^{-1} but resulted in reduced metering precision and increased fuel consumption of 1.60 L h^{-1}.

v. The replacement of metallic metering components with fibre-reinforced materials minimized tuber bruising while maintaining satisfactory seed delivery performance.

vi. The developed planter significantly reduced labour demand, improved planting accuracy, and enhanced field productivity compared with traditional manual planting methods.

vii. Overall, the planter provides a practical, technically feasible, and economically affordable mechanization option suitable for sustainable Irish potato production in smallholder farming systems.

REFERENCES

Burlingame, B. Mouillé, B., & Charrondière, R. (2009) Nutrients, Bioactive Non-Nutrients and Anti-Nutrients in Irish Potatoes. *Journal of Food Composition and Analysis,* 22(6), 494- 502.

Devaux, A., Kromann. P., & Ortiz, O. (2014). Irish Potato for Sustainable Global Food Security. *Irish potato Research*, 57(3-4), 185-199.

Dongyu, Q. (2022). Role and Potential of Potato in Global Food Security. FAO, UN. 2022. pp 15.

Food and Agriculture Organization. (n.d.) (2021) Potatoes. Why are they Important? Retrieved from http://www.fao.org/potato-2008/en/potato/importance.html

Gildemacher, P. R., Struik. P. C. & Gebremedhin, W. G. (2009). Irish Potato Seed Systems in Ethiopia. American Journal of Irish Potato Research, 86 (5), 373-385.

Kumar, A., Singh, K. P. & Pandey, K. P. (2018). Design and Development of a Power Tiller Operated Irish Potato Planter. Agricultural Engineering International: *CIGR Journal*, 20(1), 175-183.

Loghavi, M., Souri S. and Khorsandi, F. (2011). Physical and Mechanical Properties of Almond (Prunusdulcis l. cv. 7 Shahrood). Annual International Meeting. Shiraz, Iran. (ASABE 2011).

Makolo, A. M., Awulu, J. O., & Itodo, I. N. (2019). Development and Performance Evaluation of a Two-Row Yam Sett Planter. The International Journal of Engineering and Science (IJES). 8(1), 47-52. DOI:10.9790/1813-0801014752.

Mohsenin N. N. (2010). Physical Properties of Plant and Animal Materials, Structure, Physical Characteristics and Mechanical Properties. 2nd edition (Revised); Gordon & Breach Science Publishers, New York.

Saleh, A., & Awolola, J. O. (2022). Determination of Design-Related Properties of Selected Irish Potatoes Varieties. Nigerian Journal of Basic and Applied Sciences, 30(1), 36-40.

Temesgen, T., Tefera, T., &Asnakech, M. (2017). Effects of Planting Methods and Seed Size on Yield of Irish Potato (Solanumtuberosum L.) in North West Ethiopia. *Journal of Agricultural Science* 9(7), 101-110.

Ziblim, B., Abdul-Ganiyu, S., Larson, E. A., & Abdulai, K. (2025). Design, Manufacture, and Performance Evaluation of a Power Tiller Incorporated with an Irrigation System. *Journal of the Ghana Institution of Engineering*, 25(1), 65-74.

To cite this article:
A.M. Makolo, M.T. Ikyaator, and I.S. Ijiga. 2026. Development and Performance Evaluation of a Motorized Two-Row Irish Potato Planter for Improved Productivity in Smallholder Farming Systems. 1(3): 148-161. https://journals.unizik.edu.ng/ujabe/