

Vol. 2 No. 4 (2024)

INTERNATIONAL JOURNAL OF INDUSTRIAL AND PRODUCTION ENGINEERING (IJIPE)

JOURNAL HOMEPAGE: https://journals.unizik.edu.ng/index.php/ijipe/

Development of Innovative Waste Plastic-Sand Mixer for Sustainable Paver Blocks Production.

Isaac Evusiorho, Christopher Izelu, Peter Ufuoma Anaidhuno, Chinedum Ogonna Mgbemena

[1,2,3,4]*Department of Mechanical Engineering, Federal University of Petroleum Resources, Effurun, Nigeria*

Author(s) Email.: isaacevusiorho2817@gmail.com, izeluchristopher2022@gmail.com, anaidhuno.ufuoma@fupre.edu.ng, mgbemena.ogonna@fupre.edu.ng

Abstract

This research investigated the development innovative of a waste plastic-sand mixer for sustainable paver blocks production. The Full Factorial Design (FFD) at two factors, two levels with four experimental runs were chosen to obtain the paver blocks with high compressive strength. The low (-1) and high (+1) levels for the plastic waste were set to be 30% weight and 40% weight while that for the sand, were 40% weight and 70% weight. ANOVA was employed for the analysis to know the most significant factor for compressive strength. It was observed that plastic waste was the most significant factor responsible for good compressive strength as shown by the F-statistics. The plastic-sand paver blocks produced were subjected to compression tests in accordance with ASTM C140 specification, SEM - (Scanning Electron Microscopy) and Vickers micro-hardness test. From the FFD, it was observed that crushing force exerted on the paver blocks increased with an increase in the weight and density of the paver. The maximum compressive strength was seen to be 0.75 N/mm^2 for a paver block weight of 0.936 kg. The SEM morphology results showed a bond of a white farinaceous layer which indicates the presence of silica obtained from the sand and the black colour which indicates the plastic waste used. The waste plastic/sand mixer was successfully achieved at a cost of $185 which is far cheaper compared to the foreign-made, whose prices range from $1,200 to $12,000, and the prevailing market cost of concrete paver block ranges from $0.73 – $2.18. The study concludes that plastic-sand paver blocks are candidate materials that could be used as substitutes for concrete pavers.

Keywords: Block; Mixer; Paver; Plastic; Production; Sand; Waste.

1. Introduction

Plastics are ubiquitous and used in every day-to-day life. Plastics are generally non-degradable; hence, they take centuries to decay. Economic growth and changing consumption patterns are resulting in a rapid increase in the use of plastics in the world. The consumption of plastic materials increased from 5 million tons in the 1950s to 100 million tons in 2018. The amount of plastic waste is ever-increasing due to an increase in the human population, developmental activities, and changes in lifestyle and socio-economic conditions. Plastic waste is a significant portion of the total municipal solid waste (MSW). Hence, there is a need for a proper waste management system(Romano et al., 2019).

There are six major groups of plastics known: High-Density Polyethylene (HDPE), Low-Density Polyethylene (LDPE), Polypropylene (PP), Polyvinyl Chloride (PVC), Polystyrene

(PS) and Polyethylene Terephthalate (PET). The drinking water bottles belong to the group: Polyethylene Terephthalate (PET).
Plastic is one major component of Municipal Solid Waste (MSW) which is becoming a major research issue for its possible use in pavement blocks and roofing tiles. Polymer-modified pavement blocks have applications in road construction and buildings. The pavement blocks are made of 70% plastic waste and 30% sand. The pavement blocks are difficult to rot or decay and last longer than cement. Pavement in construction is an outdoor floor or superficial surface covering. Paving materials include asphalt concrete, stone such as flagstone, cobblestone, artificial stone, bricks, tiles, and sometimes wood. In landscape, architectural pavements are part of the hardscape and are used on sidewalks, road surfaces, patios, and courtyards. Paver block technology has been introduced in construction a decade ago for specific requirements namely footpath and parking areas.
Plastic is one of the most used substances in everyday life but it becomes hazardous after usage due to its non-biodegradability (Mittal et al., 2020). Dhoke et al., (2020), discovered that plastics constitute 12.7% of total waste produced most of which is from discarded water bottles, plastic chairs, plastic buckets, plastic bowls etc. and they cannot be disposed of by discarding or burning, as they produce unrestrained fire or contaminate the soil and vegetation.

Plastic wastes are the major cause of environmental pollution in Nigeria and the main component of Municipal Solid Waste (MSW). They are responsible for the blockage of drains and gutters; the release of toxic gas into the atmosphere when burnt, and the breeding ground for mosquitoes. Plastic wastes can be recycled into useful products. However, despite the efforts of the government in the disposal of plastic wastes, it is still a menace to society. The cost of the conventional pavement block is very high due to the high cost of cements. This research is aimed at providing an alternative solution for better management of plastic wastes for societal application in the area of development of the machine for the production of pavement blocks that are cheaper, sustainable with optimum strength.
Recently, there have been successful applications of using local waste materials as a partial replacement for cement or aggregates in manufacturing concrete products in some parts of the world. Numerous researches on the application of waste tires as fine and coarse aggregates are available in the literature which demonstrated the feasibility of using large amounts of the waste tire in concrete products(Ohemeng & Yalley, 2013).
Nnorom et al. 2023 investigated the physical/mechanical properties of sand-plastics interlocking paving bricks, Interlocking paving bricks were produced with plastic wastes and sand using heating technique without other cementing or binding agent and water. Waste single-use plastics - polyethylene terephthalate (PET) bottles and low-density polyethylene (LDPE) sachet water films used respectively were sourced from dump site, washed, air dried, melted and mixed with sand of not more than 2 mm particle size to produce interlocking paving brick (IPB). Sand-plastic mix ratios of 1:1, 1:3 and 3:1 and metal mould of 190 × 90 × 90 mm dimension were used. The compressive strength, flexural tensile strength, abrasion and water-absorption test results showed that IPB from LDPE-sand composite has better mechanical performance than IPB from PET-sand composite for all the mix ratios. The IPB from LDPE-sand composite of 3:1 mix ratio had a compressive strength of 31.11 N/mm ^{2} and water absorption of 0.33% of its dry weight whereas its PET counterpart had compressive strength of 13.1 N/mm ^{2} and water absorption of 0.5%. Scanning electron microscope (SEM) and abrasion results also showed that LDPE had better compatibility with sand particles. Waste single-use plastics can be used to produce high quality interlocking paving brick without cement and water and as well reduce the menace of waste PET bottles and LDPE films in our environment. According to Gahane et al. (2022), waste plastics can be used in the construction of paving blocks. This redesigned pavement block can be used in rigid pavement construction.

Quarry dust, fine aggregate, and plastics make up the block, with fine aggregate and quarry dust accounting for 60 to 70% of the total weight. Modified pavement block compressive strength was roughly equal to regular block. Construction costs would be lowered, and it would also help to avoid the common waste plastics disposal methods of land filling and cremation, both of which have environmental consequences. The use of polymers in pavement blocks decreases weight by up to 15%. Mohammad et al. (2020) investigated the Utilization of Waste Plastic in Manufacturing of Plastic Sand Bricks, reported compressive strength of plastic sand brick of 5.6 N/mm^2 at the compressive load of 96KN, and concluded that the plastic sand bricks were useful for the construction industry when compared with Fly Ash bricks and third class clay bricks. Kumi et al. (2023) reported on using waste polyethylene to form plastic-bonded sand interlocking blocks for wall construction. The production process, mechanical properties, and failure mechanisms of three different interlocking block wall systems were reported. Plastic-bonded composite blocks were formed by mixing sand into waste polyethylene in a high-temperature extruder. The blocks formed had densities between 1.5 and 1.6 g cm^{-3} and compressive strengths of approximately 15.0 MPa. This was significantly higher than the conventional sandcrete wall blocks that are widely used in developing countries. The blocks were used to construct walls with dimensions of 1.0 m × 1.0 m × 0.15 m, and these were subjected to in-plane compressive loads. The compressive strengths of the walls ranged from 4.2 to 5.7 MPa. Variations in the block composition did not affect the failure mechanism, but the extent of the block damage after failure varied significantly. Hence, validating the potential for using waste plastics to form interlocking construction blocks for use in low-cost construction. Akinleye et al. (2022) studied the use of waste plastics for interlocking paving stone production using destructive (compressive strength) and non-destructive (Schmidt rebound hammer) testing. The proportions of 10%, 20%, 30%, 40% and 50% plastic wastes relative to stone dust were adopted for test samples production. For destructive testing, results indicated that compressive strength increases with increased plastic waste proportions until an optimum (40%) was reached before it slightly decreased. However, the compressive strength values were less than 30 N/mm^2 specifications of British Standard. Consequently, for non-destructive testing, the rebound number increased with plastic waste proportion until an optimum (40%) was reached before it slightly decreased. Since rebound hammer can be used to determine the compressive strength of concrete for laboratory samples or in-situ concrete tests. Hence, all mixtures of plastic waste relative to stone dust evaluated met the minimum standard of 30 N/mm^2 specified for a single concrete paving stone according to the British Standard code. Paver blocks are versatile, aesthetically attractive, functional, and cost-effective and require little or no maintenance if correctly manufactured and lay. Sustainable development for construction involves the use of non-conventional and innovative materials, and recycling of waste materials to compensate for the lack of natural resources and to find alternative ways to conserve the environment(Ohemeng & Yalley, 2013). From several reviews, it is evident that many research works have been carried out on concrete pavement blocks, but not so much have been done using waste plastic and sand in production of paver blocks in Nigeria. The scientific world is facing a serious problem of developing new, advanced technologies and methods to treat solid wastes, particularly non- naturally –reversible polymers. Consequently, utilizing plastic waste/ sand composite to produce pavement block is a better alternative. The high cost of concrete pavement blocks and paver machine, development of a local capacity in Nigeria is slow. There is need to develop an optimum sustainable plastic waste/sand mixer for production of pavement blocks with better compressive strength by varying percentage/ratio combination.

2. Materials and Methods

2.1 Materials

The materials adopted were chosen based on functionality, availability and process requirements. The design calculations and materials selection were achieved on standard engineering procedures to meet certain design criteria. The following materials were locally sourced within Warri and used for the fabrication of the melting and mixing machine: Gas burners, Gear motors, Pillow bearings, mild steel shaft, bearing mount, ball bearings, angle bars (mild steel), chain drive, Pulleys,M16 Bolts, M16 Nuts, M10 Bolts, and M10 nuts. The materials needed to produce the plastic blocks and pavers are sand, PET bottles, and used sachets of table water.

2.1.1 Design Concepts

The significant considerations for the design of the Waste plastic paver block mixing machine include; design concepts, design specifications, design calculations, choice of material and economic evaluations. The machine was designed for safe use and ease of operation at low maintenance cost. The fabrication process includes metal cutting, welding of the component parts and assembly.

The concept of this research was born out of the quest to get a machine that is easy to operate to produce paving blocks. Conventional paving blocks are made of cement and sand, with the high cost of cement today; there is the need to develop cheaper sustainable materials for paving blocks. The environmental hazard and pollution posed by disposed plastic waste bottles as a problem informed my choice of using these waste plastics mixed with sand for the production of paving blocks at a very low cost of production, optimum strength and better efficiency of the machine fabricated with locally sourced materials in Warri as compared to imported ones at a higher foreign exchange cost.

2.1.2 Design Considerations

The major components of the sand-plastic mixer machine are as follows: Electric motor, shaft with agitators, bucket (drum), rigid frame, Bearings, chain and sprocket.

(i) The mixer is to mix sand and waste plastic.
(ii) To be easy to construct.
(iii) To be technically simple.
(iv) The heating system for melting the waste plastics.
(v) Cost: To reduce the cost of materials used in the construction of the waste plastic/sand mixer and for those materials to be sourced locally within Warri.
(vi) Reliability: The designed sand/waste plaster mixer is quite reliable as most of the components such as the shaft agitator and electric motor are not likely to fail during operation
(vii) Aesthetic: The mixer machine is symmetrical, and the shaft is centrally located to give the machine stability. The machine has a smooth surface finish and has no sharp edges that can cause accidents.

Table 1: Materials selection (consideration for the selection)

S/N	Component	Component/material performance characteristics.	Possible options for materials	Material selected	Justification
1	Shaft	Toughness, hardness, ability to withstand fatigue and endurance stress.	Galvanized steel, mild steel, stainless steel	Mild steel	Optimum cost and toughness, can endure stress.
2	Bearing	Toughness, hardness, ability to endure stress, shocks and vibration, corrosion resistance	Galvanized, stainless	Stainless	Toughness, hardness, ability to endure stress, shocks and vibration, corrosion resistance
3	Sheet metal	Toughness, ductility, weldability	Mild steel, galvanized steel, stainless steel	Mild steel	Optimum cost, ease of welding, ductility, toughness
4	Angle Iron	Toughness, ductility, weldability	Mild steel, galvanized steel, stainless steel	Mild steel	Optimum cost, ease of welding, ductility, toughness
5	sprocket	Good heat resistance, good corrosion resistance, toughness, good impact strength.	Mild steel, galvanized steel, stainless steel	Galvanized steel	Good heat resistance, good corrosion resistance, toughness, good impact strength.
6	chain	Toughness, good corrosion resistance. good strength and stress resistance, Perfect velocity ratio, high transmission efficiency	Mild steel, galvanized steel, stainless steel	Galvanized steel	Optimum cost, toughness, good corrosion resistance, good strength and stress resistance, Perfect velocity ratio, high transmission efficiency

2.1.3 Standard Components Selection

(i) Bearing: In selecting bearings, the most important thing is to fully understand the operating conditions of the bearings. The main factors to be considered are listed in the table below.

Table 2: Main factors considered in the bearing selection.

FACTOR	ITEM TO BE CONSIDERED	SELECTION METHOD
Installation space	Bearing installed in mixer	The shaft design, its rigidity and strength were considered essential; therefore, the shaft diameter is determined at start. rolling bearings selected.
Load	Load magnitude, type and direction applied (The load resistance of the bearing is specified in terms of the basic load rating, and its value is specified in the bearing specification).	Loads are applied to bearings, load magnitude, types (radial/axial) and direction of application (both directions or single direction in the case of axial load), as well as vibration and impact were considered.
Rotational speed	The response to the rotational speed of the mixer in which bearings were installed (The limiting speed for bearing is expressed as allowable speed, and this value is specified in the bearing specification table).	Since the allowable speed differs greatly depending not only upon bearing type but on bearing size, cage, accuracy, load and lubrication, all factors were considered in selecting the bearing.
Running accuracy	Accurate rotation delivering the required performance.	Sand/waste plastic Mixer machine.
Rigidity	Rigidity that delivers the bearing performance required. The higher the rigidity that bearing possesses, the better it controls elastic deformation.	Elastic deformation occurs less in roller bearings than in ball bearings.
Misalignment	Operating conditions which cause misalignment (shaft deflection caused by load, inaccuracy of shaft and housing, mounting errors) can affect bearing performance.	Internal load caused by excessive misalignment damages bearings.

(ii) Electric motor:

Below are some of the standard steps followed the selection of the electric motor.

i. determining torque and revolutions per minute.
ii. analyzing the production environment in which the motor will need to operate – melted waste plastic/sand
iii. determining the installation space for the motor.
iv. Determining the frequency of movement in relation to lifespan.
v. Control of the motor.

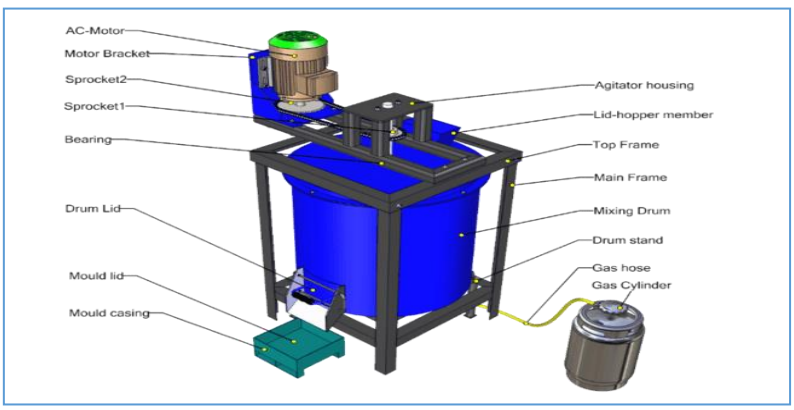

Figure 1: Designed Mixer.

2.1.4 Mechanical design of the Mixer

The main parts of the mixer are as follows:

i. Drum: It is the mixing chamber. It rotates in a direction to mix the polymer (plastics) and sand in the opposite direction to discharge the mixtures.
ii. Blades: Blades are installed inside of the drum and specially designed to mix the aggregates very well. They cover about one-third of the drum space.
iii. Shaft and Bearing: Shaft and bearing are important in the mixers for the rotation of the drum.
iv. Motor: The motor provides the required power to operate the shaft.
v. Chain-and-sprocket: It serves as a transmission belt connecting the pulleys and it transmits the power from the motor to the shaft.

2.1.5 Design of the Mixing Drum

Mass of the mixing drum $m = \rho v$, ρ = density of the medium, v = volume,

$v = \pi r^2 h$ (1)

$m = \rho \pi r^2 h$ (2)

Weight $w = \rho \pi r^2 h$ (3)

The values of the diameter of the mixer drum, the radius of the mixer drum, the height of the drum, and the mass of the drum is presented in table 3 below.

Table 3: Design calculations

S/No.	Parameter	Value	Unit
1	Number of teeth of big sprocket	38	
2	Number of teeth of small sprocket	15	
3.	The diameter of big Sprocket	158	mm
4.	The diameter of small sprocket	55	mm
5.	Diameter of the missing drum, D	640	mm
6.	Acceleration due to gravity, g	9.81	m/s
7.	Overall height of the drum, h	649	mm
8.	Mass of the drum	50	Kg
9.	Mass of the plastic-sand mixture	185	Kg
10.	Speed of the driver,	950	Rpm
11.	Mass of drum + Mass of the plastic-sand mixture	150	Kg
12.	Length of shaft	670	mm

2.1.6 Agitation Process

The term “agitation” is the process of providing motion to liquid, thus adding mixing and dispersion. This motion is responsible for the desired process result, which may include mixing, blending, dissolution, heat transfer, dispersion of liquids and gases into liquids, solid suspension. Agitation of liquids is accomplished in a container equipped with an impeller. The impeller is inserted into the liquid and rotated in such a manner as to cause both motion and fine scale eddies in the fluid. Mechanical energy is required to rotate the impeller, which in turn transmits this energy to the fluid. The mechanism of transmission is similar to that in the parallel-plate, in which the moving top plate transmits velocity to the fluid nearby by the effect of viscosity. In agitation, the impeller is rotating; the sides and bottom of the tank are stationary, and the resultant velocity gradient cause mixing and dispersion. The impeller designed is anchor type style, which is good for liquids of high viscosity above 20Kg/m-s (200 Poise). The anchor primarily removes the fluid next to the heat transfer surface so that fresh fluid of

differing temperature replaces the old fluid. The motor required for the agitation is sized from the power requirements.

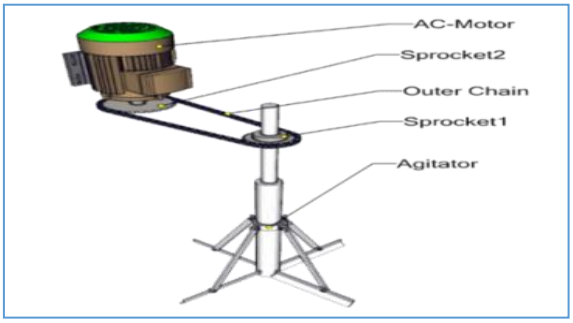

Figure 2: Mechanism of agitation

2.2 Experimental Methodology

The methodology employed is the primary research method which involves experimental analysis, design concept, detail design, materials selection, fabrication, and laboratory analysis. The methods and procedures adopted to achieve this project were through standard engineering design and careful materials selection.

The figure below is a schematic flow of the experimental methodology.

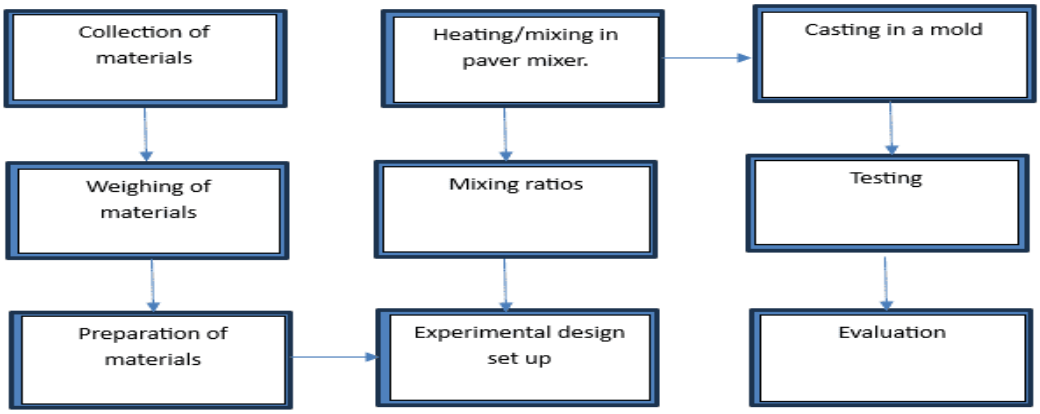

Figure 3: Experimental Methodology

2.2.1. Sample Production

The sand was used in the experiment, as well as thermoplastic wastes consisting of Polyethylene Terephthalate (PET) obtained from used PET bottles and Low-Density Polyethylene (LDPE) from used sachet water and polythene bag wastes. The thermoplastic wastes were finely diced and dry-mixed in an informal ratio. This combination was dry-mixed with waste sand collected from a construction area at the Federal University of Petroleum Resources (FUPRE) in three distinct fixed proportions of plastic waste by percentage weight. The constructed paver block mixing machine was preheated to a temperature of 700°C and kept at that temperature for 20 minutes before adding the plastic waste and sand mixtures at various proportions. Before de-moulding, the molten compound was placed into a mould and allowed to cool. Three specimens with dimensions of 140 mm x 90 mm x 50 mm were made.

2.2.2. Blending of waste plastic and sand

The waste plastic and sand were blended in ratios, sand to plastic, 1:2, 1:3, 1:4 carefully selected based on experimental design.



Figure 4 Sand/Plastic Ratios Blending

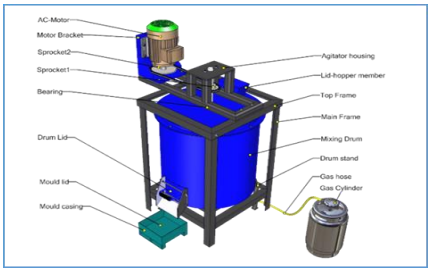

Figure 4 Designed mixer



Figure 6 Constructed mixer

3. Result and Discussions.

3.1 Full Factorial Design (FFD)

The design of the experiment employed in this work is the full factorial design (FFD). The two-level factorial design was employed in the Design of Experiment. The full factorial design summary is described in Table 5 and it shows that there are 2 factors, four experimental runs, one replicate, one block and two or four base designs. Table 6 shows the factor information and the coded values. Tables 7 and 8 show the FFD experimental outlay and the design table (randomized) for the FFD respectively. The letter **A** stands for the Plastic waste while the letter **B** stands for the sand. This analysis was conducted using the Minitab statistical software. The analysis of variance (ANOVA) is shown in Table 9. Table 10 is the model summary.

Table 5: Design Summary for the FFD

Factors:	2	Base Design:	2, 4
Runs:	4	Replicates:	1
Blocks:	1	Center pts (total):	0

Table 6: Factor Information

Factor	**Type**	**Levels**	**Values**
Plastic wastes	Fixed	2	-1, 1
Sand	Fixed	2	-1, 1

Table 7: Design Table (randomized) for the FFD

1	**Blk**	**A**	**B**
1	1	+	+
2	1	+	-
3	1	-	+
4	1	-	-

Table 8: The FFD Experimental Outlay

	C1	C2	C3	C4	C5	C6	C7
	StdOrder	RunOrder	CenterPt	Blocks	Plastic wastes	Sand	Compressive Strength
1	4	1	1	1	1	1	0.75
2	2	2	1	1	1	-1	0.44
3	3	3	1	1	-1	1	0.48
4	1	4	1	1	-1	-1	0.56

Regression Equation in Uncoded Units

Compressive Strength = 0.5575 + 0.03750 Plastic wastes + 0.05750 Sand + 0.09750 Plastic wastes*Sand (4)

Table 9: Analysis of Variance

Source	DF	Adj SS	Adj MS	F-Value	P-Value
Plastic wastes	1	0.038025	0.038025	6.76	0.234
Sand	1	0.013225	0.013225	2.35	0.368
Error	1	0.005625	0.005625		
Total	3	0.056875			

Table 10: Model Summary

S	R-sq	R-sq(adj)	R-sq(pred)
0.075	90.11%	70.33%	0.00%

Since the p-value > α, it cannot be concluded that the data do not follow the distribution. It failed to reject the null hypothesis, H_0. A large F-value shows that the term or model is significant. In this study, Table 9 show that Plastic waste is the most significant factor for the two-way ANOVA analysis. Equation (1) shows the regression equation for the two-way ANOVA. The R-squared value for the equation is 90.11%.

3.2 The Compression test for the Paver Produced

Table 11 is a summary of the results of the compression test conducted on the plastic-sand paver produced. The test was conducted under the requirements of ASTM C140, which is the standard test for concrete pavers or interlocking stones. The age of the paver blocks before the compression test is 60 days and the test were conducted for four samples in line with the full factorial design.

Table 11: Compression Test results for the plastic-sand paver block

Sample Number and Runs	Date of Casting	Date of Testing	Age of Paver (days)	Area of paver (mm^2)	Weight of paver (kg)	Density (kg/m^3)	Crushing Force (KN)	Compressive Strength (N/mm^2)
A1	9/11/2021	18/01/2022	60	12600	0.936	1486	95	0.75
A2	9/11/2021	18/01/2022	60	12600	0.830	1317	55	0.44
A3	9/11/2021	18/01/2022	60	12600	0.862	1368	60	0.48
A4	9/11/2021	18/01/2022	60	12600	0.876	1390	70	0.56

It was observed that the crushing force exerted on the paver blocks increases with the increase in the weight and density of the paver. The maximum compressive strength was found in sample A1 with the weight of 0.936 kg as 0.75 N/mm^2.

3.3 Vickers Micro Hardness Test

Table 12 is a summary of the results of the Vickers micro-hardness test conducted on the plastic-sand paver produced. The test was conducted according to ASTM E384 Standards. Two samples of the paver blocks were evaluated. The average diameter along the diagonals is approximately 0.030 and the applied load force is 0.3 kgf. The results of the Vickers micro-hardness test show that sample A2 is harder than sample A1. Figure 6 is a graphical depiction of the Vickers' micro-hardness test.

Table 12: Vickers micro-hardness test

Sample	**Test 1 (HV)**	**Test 2 (HV)**	**Test 3 (HV)**	**Average of the diameter of the two diagonals,** d	**Applied load kgf**
A1	56.5	56.9	56.5	0.032	0.3
A2	63.5	63.8	63.9	0.029	0.3

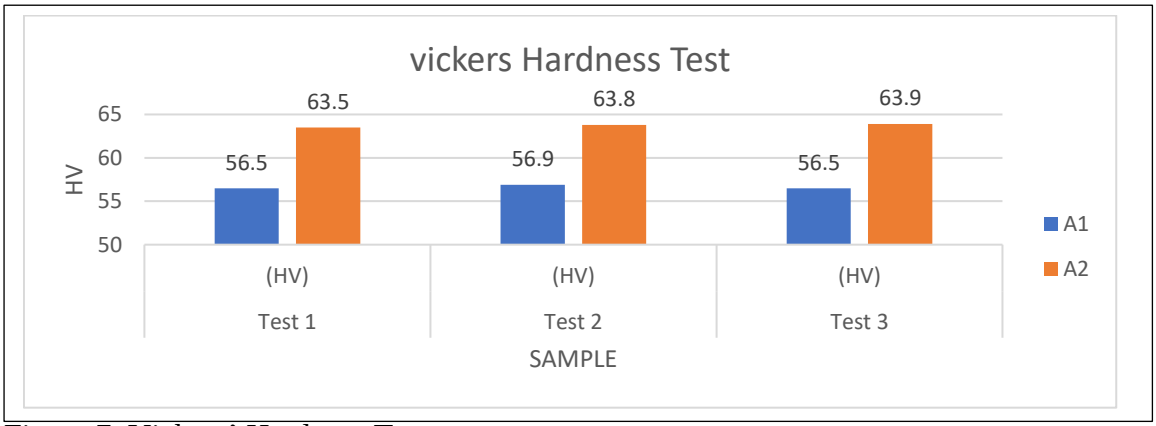

Figure 7: Vickers' Hardness Test

The SEM was used for characterizing the morphology of the paving block. The SEM images were set to magnifications from 500X to 2000X as shown in figure 8 to 10. The white farinaceous layers indicate the presence of silica obtained from the sand.
The black colour indicates the waste plastic used for the production of the plastic-sand block.

The morphology at 2000X distinctly shows the dispersion of the sand in the plastic-sand block matrix.

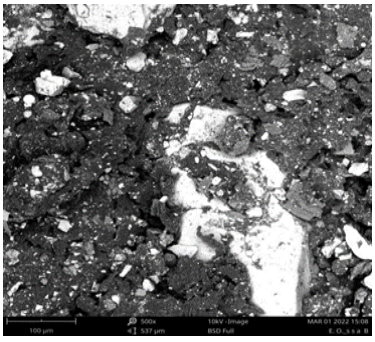

Figure 8: SEM morphology of the Plastic-sand block at 500X magnification

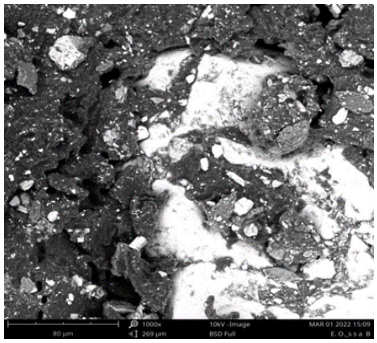

Figure 9**:** SEM morphology of the Plastic-Sand block at 1000X magnification

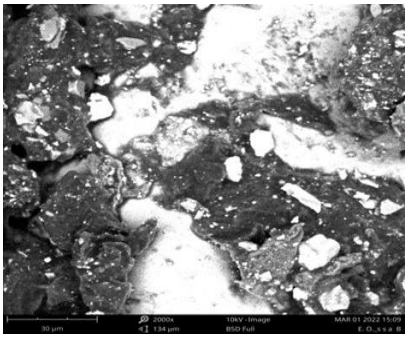

Figure 10: SEM morphology of the Plastic-sand block at 2000X magnification

The Figures 8, 9, and 10 above showed the micro-structure of specimens done with SEM. The main constituents are plastic and sand displayed in the picture with dark and white flakes of bond evenly arranged in crystalline bond.

Table 14: Bill of Engineering Materials and Evaluation.

S/N	Description	Quantity	Unit Price, $	Amount $
1	Engineering design drawings	1	9	9
2	2” x 2” x 50mm thickness angle Iron	1	7	7
3	8ft x 4ft x 3mm thickness mild steel sheet plate	1	29	29
4	50mm shaft, 3m long	1	18	18
5	3 Phase Electric motor	1	76	76
6	Bearing	1	8	8
7	Sprocket	1	6	6
8	Chain	1	6	6
9	Electrode, mild steel E6013, Packet	1	7	7
10	Labour			18
	Total			184

Table 15: Cost of produced plastic waste paver block: $ 0.48 Cent

S/N	Description	Quantity	Unit Price, $	Amount $
1	Plastic waste cans	Ikg	0.12	0.12
2	50 grams of sand		0.06	0.06
3	Lbour		0.30	0.30
	Total			0.48

Imported/Foreign made: Concrete paver machine, Model LDHM31, Price ranges from $1,200 to $12,000, and the prevailing market cost of concrete paver block ranges from $0.73 – $2.18 while the output from the waste/sand mixer was evaluated to be $0.48.

Cost-Benefit Analysis of Waste-Plastic-Sand Mixer and Accessories Project

The project would involve manufacturing a waste-plastic-sand mixer and its accessories for sales to companies and individuals producing paver blocks.

Costs:

i. Initial Investment (Capital Costs):
   a. Machinery and equipment: $394
   b. Factory setup and infrastructure: $1,212
   c. Raw materials and initial inventory: $61
   d. Other accessories : $30
   e. Total: $1,697

ii. Operational Costs:
   a. Raw materials and supplies: $ 364/year
   b. Labor and utilities: $ 727/year
   c. Marketing and advertising: $ 182/year
   d. Maintenance and repairs: $ 30/year

   Total: $ 1,303/year

Intangible Costs:
- Opportunity costs (alternative uses for factory space and resources): $ 182/year

Benefits:

i. Tangible Benefits:
    a. Revenue from mixer and accessories sales: $ 758/year
    b. Cost savings from reduced waste disposal: $ 318/year
    c. Job creation and employment opportunities: $ 1,818/year (estimated value)
ii. Intangible Benefits:
    a. Environmental benefits (reduced plastic waste and carbon footprint): priceless
    b. Social benefits (community engagement and education): priceless

Net Benefit:
Total Benefits: $ 3,076/year
Total Costs: $ 3,000/year (including initial investment and projected expenses)
Net Benefit: $ 76/year
Benefit-Cost Ratio (BCR):
BCR = Total Benefits / Total Costs
= $ 3,076 / $ 3,000
= 1.03
Comment on the outcome:
The project's Benefit-Cost Ratio (BCR) of 1.03 indicates that for every dollar invested, the project is expected to generate a return of $1.03. This suggests that the project is likely to be profitable and a good investment.
The positive net benefit of $76 per year indicates that the project's benefits outweigh its costs, making it a viable and sustainable investment. The project's environmental and social benefits, although difficult to quantify, add to its overall value and potential for long-term success.

To further improve the project's viability, consider:

i. Increasing revenue through expanded sales.
ii. Reducing costs by optimizing manufacturing processes.
iii. Exploring additional revenue streams.
iv. Enhancing the project's environmental and social benefits to attract grants or incentives.



Figure 11: Produced Waste Plastic/ Sand Paver Blocks.

4.0 Conclusion

This research investigated the development of innovative waste plastic-sand mixer for sustainable paver blocks production. The plastic-sand paver blocks produced were subjected to compression tests in accordance with ASTM C140 specification, Vickers micro-hardness test and Scanning Electron Microscopy (SEM). It was observed from the FFD that the crushing force exerted on the paver blocks increased with an increase in the weight and density of the paver. The maximum compressive strength was found to be 0.75 N/mm^2 for a paver block weight of 0.936 kg. The maximum Vickers Pyramid Number (HV) obtained from the micro-hardness test conducted on the paver blocks at 0.3kgf was found to be 63.9. The SEM morphology results showed a bond of the white farinaceous layer which indicates the presence of silica obtained from the sand and the black colour which indicates the plastic waste used. The plastic paving blocks developed were observed to be of good quality. The transmission speed of 3.442 horsepower and the mixing force of 1471N obtained from the design calculations were found to give a throughput of 90kg of the paver blocks. The waste plastic/sand mixer was successfully achieved at a cost of $185 which is far cheaper compared to the foreign-made, whose prices range from $1,200 to $12,000, and the prevailing market cost of concrete paver block ranges from $0.73 – $2.18 while the output from the waste/sand mixer was evaluated to be $0.48. The cost-benefit analysis done gave a positive value which affirmed the viability of taking it as a project. The study concludes that plastic-sand paver blocks are candidate materials that could be used as substitutes for concrete pavers.

References

Akinleye, M. T., Tijani, M. A., Salami, L. O.1, Joseph, O. P., Salami, M. O. and Ogungbola, O. I. (2022), Mechanical Performance of Interlocking Paving Stone using Dissolved Waste Plastics. FUOYE Journal of Innovation Science and Technology, 2(1) , 66-72.

Al-Mansour, A., Chen, S., Xu, C., Peng, Y., Wang, J., Ruan, S., & Zeng, Q. (2022). Sustainable cement mortar with recycled plastics enabled by the matrix-aggregate compatibility improvement. *Construction and Building Materials*, *318*. https://doi.org/10.1016/j.conbuildmat.2021.125994

Dhoke, A., Shingne, N., Rana, A., Murodiya, P., and Nimje, S. (2020). Reuse of PET waste plastic in paver blocks. International Research Journal of Engineering and Technology. 7(4): 320-332

Gahane S., Gour S., Raut K., Kumari D., Gaidhane S., and Moon S.A. (2022), Plastic Waste Utilization in Paver Block, International Research Journal of Modernization in Engineering Technology and Science, Volume:04/Issue:04/ pp851-857, e-ISSN: 2582-5208.

Kumi-Larbi A., Mohammed L., Tagbor T.A., Tulashie S.K. and Cheeseman C. (2023), Recycling Waste Plastics into Plastic-Bonded Sand Interlocking Blocks for Wall Construction in Developing Countries,S*ustainability* 2023, *15*(24),16602;

Mittal, K., Agrawal, S., Bhadoria, O. P. S. and Mukesh P. (2020). Sustainability and limitation of plastic modified bituminous interlocked paving block: A supervision. International Journal of Innovative Technology and Exploring Engineering 9(8): 699 – 701.

Mohammad S. , Rahul J. , Roshan J. , Falgunee R. S. , and Devannand M. S. (2020) Utilization of Waste Plastic in Manufacturing of Plastic Sand Bricks, International Journal of Innovations in Engineering and Science, Vol 5, No.1, 38 – 42, e-ISSN: 2456-3463.

Nnorom O.O., Onuegbu G.C. and Nwanonenyi S.C. (2023), Physico-Mechanical Properties of sand-plastic interlocking paving brick, Journal of Thermoplastic Composite. 37(1): 192-205, DOI:10.1177/08927057231171525

Ohemeng, E., & Yalley, P. (2013). Models for predicting the density and compressive strength of rubberized concrete pavement blocks. *Construction and Building Materials*, *47*, 656–661. https://doi.org/10.1016/j.conbuildmat.2013.05.080

Romano, G., Rapposelli, A., & Marrucci, L. (2019). Improving waste production and recycling through zero-waste strategy and privatization: An empirical investigation. *Resources, Conservation and Recycling*, *146*, 256–263. https://doi.org/10.1016/j.resconrec.2019.03.030

Suganthy, P., Chandrasekar, D., & Kumar, S. (2013). Utilization Of Pulverized Plastic in Cement Concrete as fine aggregate. *Undefined*, *02*(06), 1015–1019. https://doi.org/10.15623/IJRET.2013.0206018